Model: **ICVSK-24OL2**

KEGCO 24" WIDE DUAL TAP ALL STAINLESS STEEL BUILT-IN LEFT HINGE OUTDOOR NITRO COFFEE KEGERATOR

FEATURES

- PERLICK FAUCETS
- BUILT-IN OR FREESTANDING USE
- DIGITAL TEMPERATURE DISPLAY
- STAINLESS STEEL INTERIOR
- FAN FORCED COOLING
- INTEGRATED DOOR LOCK

CAPACITY OPTIONS

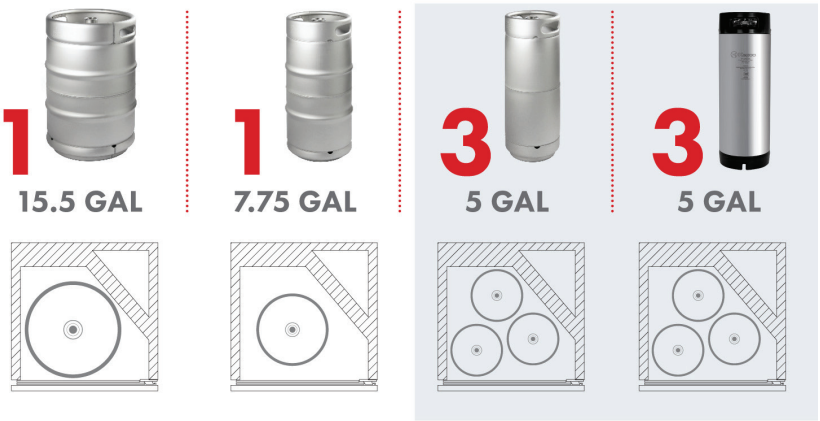

INCLUDES COLD BREW DISPENSE KIT

- 15 Cu. ft. High Pressure Nitrogen Tank
- Commercial grade double gauge nitrogen regulator with air splitter
- Two sets of ball lock home brew keg couplers
- 14.5" tall, 3" diameter polished stainless steel draft tower
- Hoses and fittings

NITROGEN TANK

DRAFT TOWER

REGULATOR

KEG COUPLERS

MONEY BACK 90 DAYS GUARANTEE

Kegco

(800) 710 9939

support@beveragefactory.com
www.beveragefactory.com

OUR SHOWROOM

8510 Miralani Drive
San Diego, CA 92126

Mon-Fri, 7:00am - 4:00pm

Model: **ICVSK-24OL2**

KEGCO 24" WIDE DUAL TAP ALL STAINLESS STEEL BUILT-IN LEFT HINGE OUTDOOR NITRO COFFEE KEGERATOR

Kegco

Cabinet SKU:
KC VSK-24O-SSL

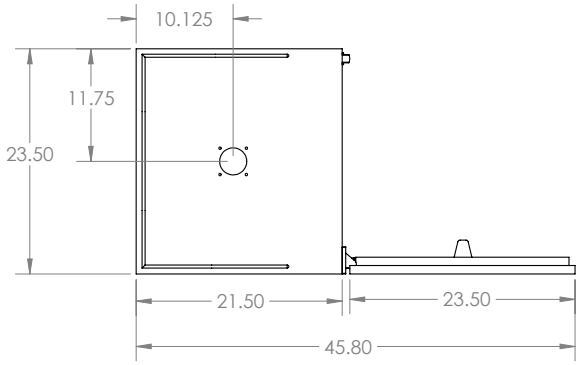

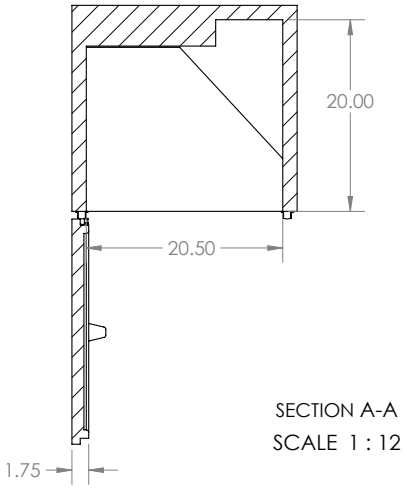

Intertek

Intertek

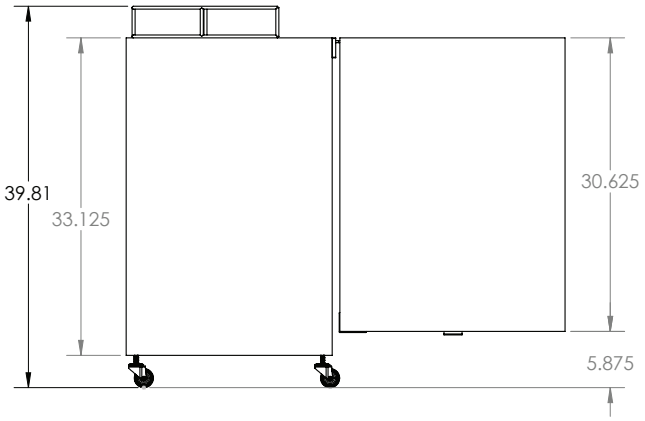

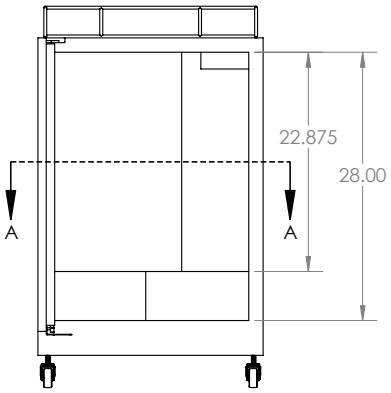

DIMENSIONS	
Height	34"
Width	23.5"
Depth	23.25"
Capacity	6.88 cu.ft.

WEIGHT	
Unit Weight	93.7 lbs.

KEG STORAGE CAPACITIES	
Full Size / 1/2-Barrel	1
Pony Size / 1/4-Barrel	1
1/4-Barrel Slim	1
1/6-Barrel	3
5 gal. Ball/Pin Lock Keg	3

CONTROLS	
Adjustable Thermostat	Yes
Digital	Yes

WARRANTY	
Labor	1 Year
Parts	1 Year
Compressor (Parts Only)	5 Years

KEY FEATURES	
Built-in Capable	Yes
Door Swing	Left Hinge
Keg Coupler	Yes
Security Lock	Yes
Regulator	Yes
Tank	Nitrogen Tank
Cleaning Kit	Optional Add-On
Outdoor Use	Yes
Commercial Use	Yes
Tap Kit	Yes
Number of Taps	2
Adjustable Shelves	Optional Add-On
Shelf Type	Wire
Interior Light	Yes

ELECTRICAL	
Electrical Requirements	115v/60hz
Running Amps	1.28 A

CERTIFICATIONS	
ETL Listed	Yes

EXTERIOR	
Cabinet	Stainless Steel
Drip Tray	No
Guard Rail	Yes
Casters	Yes

DOOR	
Color/ Material	Stainless Steel
Number of Doors	1
Door Handle	Yes
Field Reversible	No
Accepts Overlay Panel	No

DRAFT BEER TOWER	
Number of Faucets	2
Material	Stainless Steel
Height	14"
Diameter	3"

COOLING SYSTEM	
Type	Compressor
Defrost System	Automatic
Front Ventilation	Yes
Temperature Range	32-64°F