CellarPro

Control the Elements

3000S / 4000S / 6000S / 8000S

Split Refrigeration Systems

Owner's Manual

C O N G R A T U L A T I O N S !

Thank you for purchasing a new CellarPro cooling system.

Please take a minute to read through this Owner's Manual before you unpack, install and turn on your Cooling Unit.

If you have any questions about your new cooling unit, it is likely that you will find the answers in this Owner's Manual. We also have more information on our website, including the latest version of the Owner's Manual, at www.cellarpro.com/customerservice .

If you still have questions, please don't hesitate to contact your dealer or CellarPro directly. We can be reached during normal business hours at 707.794.8000. You also may contact us anytime via email at info@cellarpro.com.

Contact Information:

CellarPro Cooling Systems
531 Mercantile Drive
Cotati, CA 94931
707.794.8000
Email: info@cellarprocoolingsystems.com
Website: www.cellarprocoolingsystems.com

Don't forget to activate your warranty by completing the Support and Data Service Sheet (pages 35-36) and fax both pages to us at 707.794.8005.

Table of Contents

I. Package Contents 4

II. Specifications, Cut Sheets, and Cellar Construction 5

III. Installation Instructions 10

IV. Operating Instructions 24

V. Troubleshooting 30

VI. Limited Warranty 34

VII. Support and Data Service Sheet 35

I. Package Contents

3000S/4000S

BOX 1:

DESCRIPTION	QTY
EVAPORATOR	1
TOP MOUNTING BRACKET	2
SIDE MOUNTING BRACKET	2
WALL MOUNTING SCREWS	16
DRAIN TUBING	10 FT.
OWNERS MANUAL	1
CORK TAPE	1 FT.
DRAIN KNOCKOUT SNAP BUSHING	1
SIGHT GLASS	1
FILTER DRIER	1

BOX 2:

DESCRIPTION	QTY
CONDENSING UNIT	1

BOX 3 (OPTIONAL):

DESCRIPTION	QTY
CONDENSING UNIT OUTDOOR COVER	1 SET
COVER ASSEMBLY HARDWARE	1 SET

6000S/8000S

BOX 1:

DESCRIPTION	QTY
EVAPORATOR	1
REAR WALL MOUNTING BRACKET	2
WALL MOUNTING SCREWS	6
DRAIN TUBING	10 FT.
OWNERS MANUAL	1
CORK TAPE	2 FT.
DRAIN KNOCKOUT SNAP BUSHING	1
HOLE PLUGS FOR ANCHOR BOLTS	2
SIGHT GLASS	1
FILTER DRIER	1

BOX 2:

DESCRIPTION	QTY
CONDENSING UNIT	1

BOX 3 (OPTIONAL):

DESCRIPTION	QTY
CONDENSING UNIT OUTDOOR COVER	1 SET

II. Specifications, Cut Sheets and Cellar Construction

	Evaporator		
Model	**Dimensions W x D x H (inches)**	**Weight (lbs.)**	**Running Amps (with fan on "high")**
3000S	16.6 x 12.6 x 22.1 (incl. mounting brackets)	40	6.2
4000S	16.6 x 12.6 x 22.1 (incl. mounting brackets)	42	8.9
6000S	30.4 x 14.4 x 13.2 (incl. mounting bracket)	68	13.1
8000S	46.4 x 14.4 x 13.2 (incl. mounting bracket)	85	15.4

	Condensing unit - Indoor		Condensing unit - Outdoor	
Model	**Dimensions W x D x H (inches)**	**Weight (lbs.)**	**Dimensions W x D x H (inches)**	**Weight (lbs.)**
3000S	13.5 x 18.9 x 9.1	42	19.4 x 23.3 x 18.8 (with cover)	73
4000S	13.5 x 18.9 x 10.3	45		76
6000S	13.9 x 18.9 x 11.9	54		85
8000S	16.8 x 20.8 x 14	76		107

Evaporator Cut Sheets

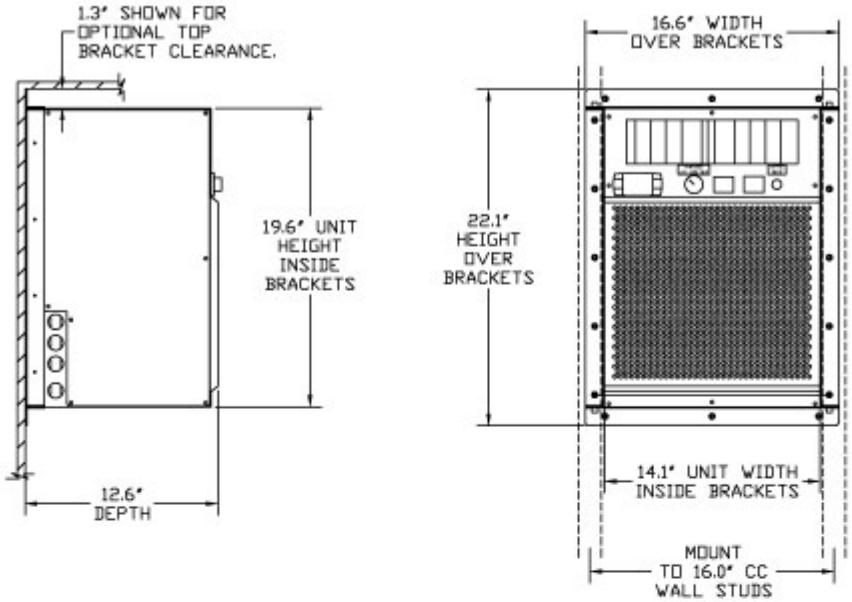

3000S / 4000S EVAPORATOR

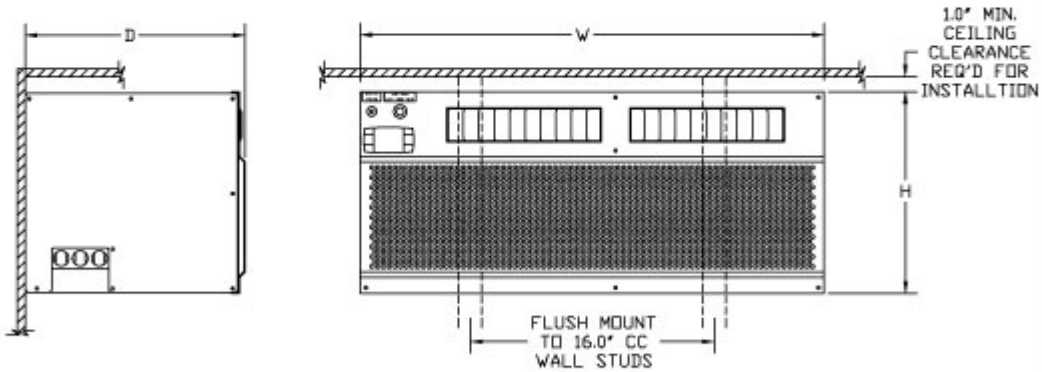

6000S / 8000S EVAPORATOR

EVAPORATOR MODEL	DIMENSIONS (IN)			FAN AMPS @ 115V/60HZ			WEIGHT (LBS)
	W	H	D	HIGH	MED	LOW	
3000S	16.6	22.1	12.6	1.0	0.8	0.7	40
4000S	16.6	22.1	12.6	1.4	1.1	1.0	42
6000S	30.4	13.2	14.4	2.1	1.7	1.4	68
8000S	46.4	13.2	14.4	2.8	2.2	1.9	85

NOTE:
ELECTRICAL AND REFRIGERATION KNOCKOUTS AVAILABLE TOP LEFT, BACK LEFT, OR SIDES. REFER TO KNOCKOUT DETAIL DRAWING.

1452R06

Condensing Unit Cut Sheets

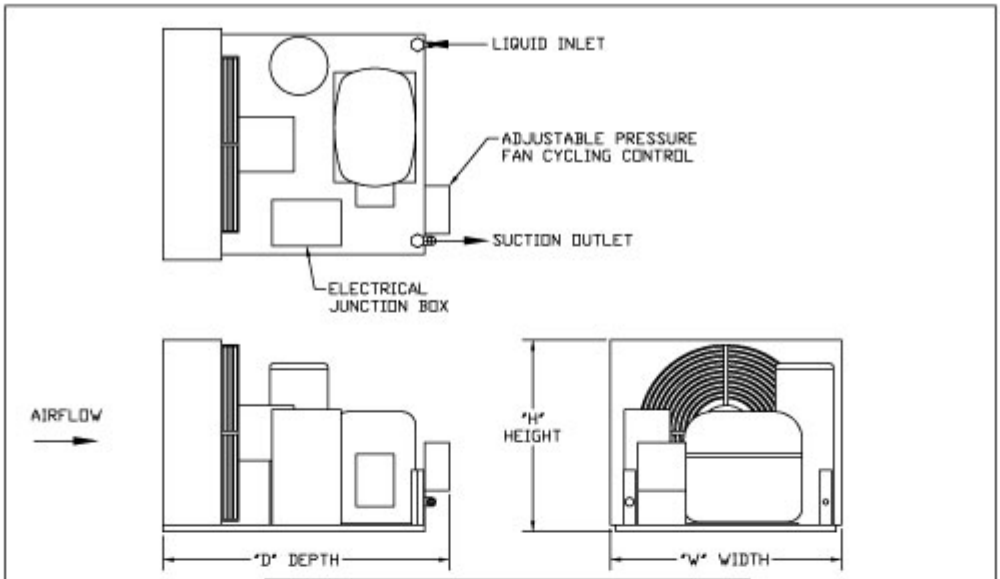

CONDENSING UNIT (INDOOR)

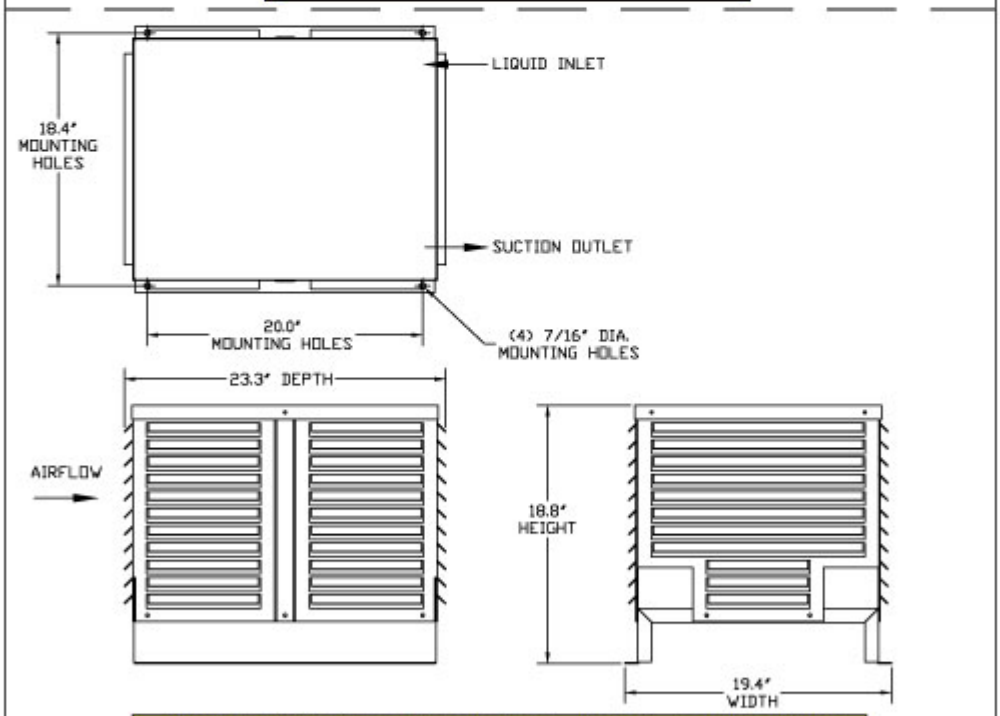

CONDENSING UNIT WITH HOOD (OUTDOOR)

CONDENSING UNIT	INDOOR DIMENSIONS (IN)			OUTDOOR DIMENSIONS (IN)			ELECTRICAL @ 115V/60HZ		WEIGHT (LBS)	
MODEL	W	H	D	W	H	D	MCA	LRA	INDOOR	OUTDOOR
3000S	13.5	9.1	18.9	19.4	18.8	23.3	5.1	28.0	42	73
4000S	13.5	10.3	18.9	19.4	18.8	23.3	9.3	40.0	45	76
6000S	13.9	11.9	18.9	19.4	18.8	23.3	13.7	53.0	54	85
8000S	16.8	14.0	20.8	19.4	18.8	23.3	15.4	51.0	76	107

1453R04

Insulation

CellarPro cooling units are designed to be installed inside wine cellars that have proper insulation, moisture barriers and an airtight seal from the environment outside the cellar. Interior walls and floor should have a minimum of R-11 insulation, and a vapor barrier on the warm side of the insulation. The ceiling should have a minimum of R-19 insulation and a vapor barrier on the warm side of the insulation. Doors also should be insulated and tightly sealed with weather stripping around the perimeter of the door. Surface-mounted fixtures are recommended over recessed lighting, which can allow air to leak into the cellar.

It is important that all walls, joints, doors and windows, electrical outlets and/or switches, pipes, vents and light fixtures be sealed to prevent air and moisture from entering the cellar. If there is a leak in the cellar, the cooling unit will build up excess condensation.

We strongly recommend that the overflow drain line (shipped loose with the cooling unit) be connected to the overflow drain (as shown in the installation section). In addition, we recommend turning on the electric heating element to burn off excess condensate that accumulates in the stainless steel pan during the initial cooling of the cellar and during high run-times, as well as in high-humidity environments.

Fan Speeds

Your fan speed setting will depend on the thermal load on the wine cellar, and the resulting BTU that is required to cool and maintain your wine cellar at the desired temperature.

Ventilation

Adequate ventilation is critically important for the proper operation of your CellarPro cooling unit.

Outside the Cellar

Condensing unit Air Exhaust. Condensing units create significant hot air which must be exhausted into an appropriately-sized space in order for the heat to dissipate. If the space is constrained and/or too small, the heat will not dissipate. In this event, the cooling unit will be forced to re-circulate its hot air exhaust and/or the static pressure will back up the cooling unit. If this happens, the cooling unit's ability to create cold air inside the cellar will be compromised.

Condenser Air Intake. The condenser coils require access to cool air in order for the cooling unit to produce cold air. In addition, the cooling unit must be installed so that, after its installation, the condenser coils are accessible for periodic cleaning.

The Condensing unit cannot be ducted.

Inside the Cellar

Evaporator Air Intake. When the warm air passes across the evaporator coils, heat is removed from the air, and the resulting cold air is exhausted into the cellar. To ensure proper airflow, minimum clearance of 12" is required in front of the cooling unit.

Evaporator Air Exhaust. Cold air is exhausted at the top front of the cooling unit. Because CellarPro cooling units are located at the highest point inside wine cellars, the cold air exhaust eventually will drop to the bottom of the cellar. To ensure proper airflow and reduce temperature stratification inside the cellar, the space in front of the cold air discharge should be clear of any obstructions, including wine bottles, wine racks, etc.

Ducting. CellarPro Evaporators cold air exhaust and return can be ducted with a hood up to 50 equivalent feet with 8" diameter ducting, or 100 equivalent feet with our auxiliary fan and 8" diameter ducting. We offer a duct kit (sold separately) with two fitting that attach to the front of the cooling unit and can be ducted.

We also offer a remote control panel kit that can be installed remotely (up to 10 feet) from the cooling unit, either inside or outside the cellar, and a bottle probe (10 foot cord) that can be plugged into the cooling unit.

III. Installation Instructions

Installation Instructions

Split System piping and wiring must be installed by a qualified Refrigeration Technician in accordance with local and national code requirements.

Condensing Unit Installation

Indoor Units

- Condensing units can be installed remotely from the cellar in an area protected from direct exposure to moisture and sunlight.
- The area must have suitable ventilation to maintain an ambient temperature of 110°F or less.
- If the area does not have adequate ventilation, a vent fan should be added to supply fresh air to the space (suggested 600CFM).
- A minimum of 12" of open air space is required in front of the condenser coils.
- Indoor units can be installed with the optional outdoor hood if additional mechanical protection is desired.
- A minimum of 12" of open air space around the perimeter of the outdoor hood is required.

Outdoor Units

- Condensing units must be installed with the outdoor hood if the unit will be located outdoors.
- The unit is designed to operate in temperatures ranging from 0°F to 110°F. **Please note:** An optional compressor heater is required for temperatures below 40°F.
- A minimum of 12" of open air space around the perimeter of the outdoor hood is required.

Evaporator Unit Installation

As warm air rises to the top of the cellar, the cooling unit pulls the warm air through the evaporator coil and removes the heat from the warm air. Once cooled, the cold air is discharged from the front of the cooling unit and circulates through the cellar. Therefore, we recommend mounting the evaporator as close to the ceiling as possible inside the cellar.

3000S / 4000S

Side mounting brackets are provided for mounting the evaporator flush to a wall inside the cellar. Optional top and bottom brackets (non-load bearing) are available upon request.

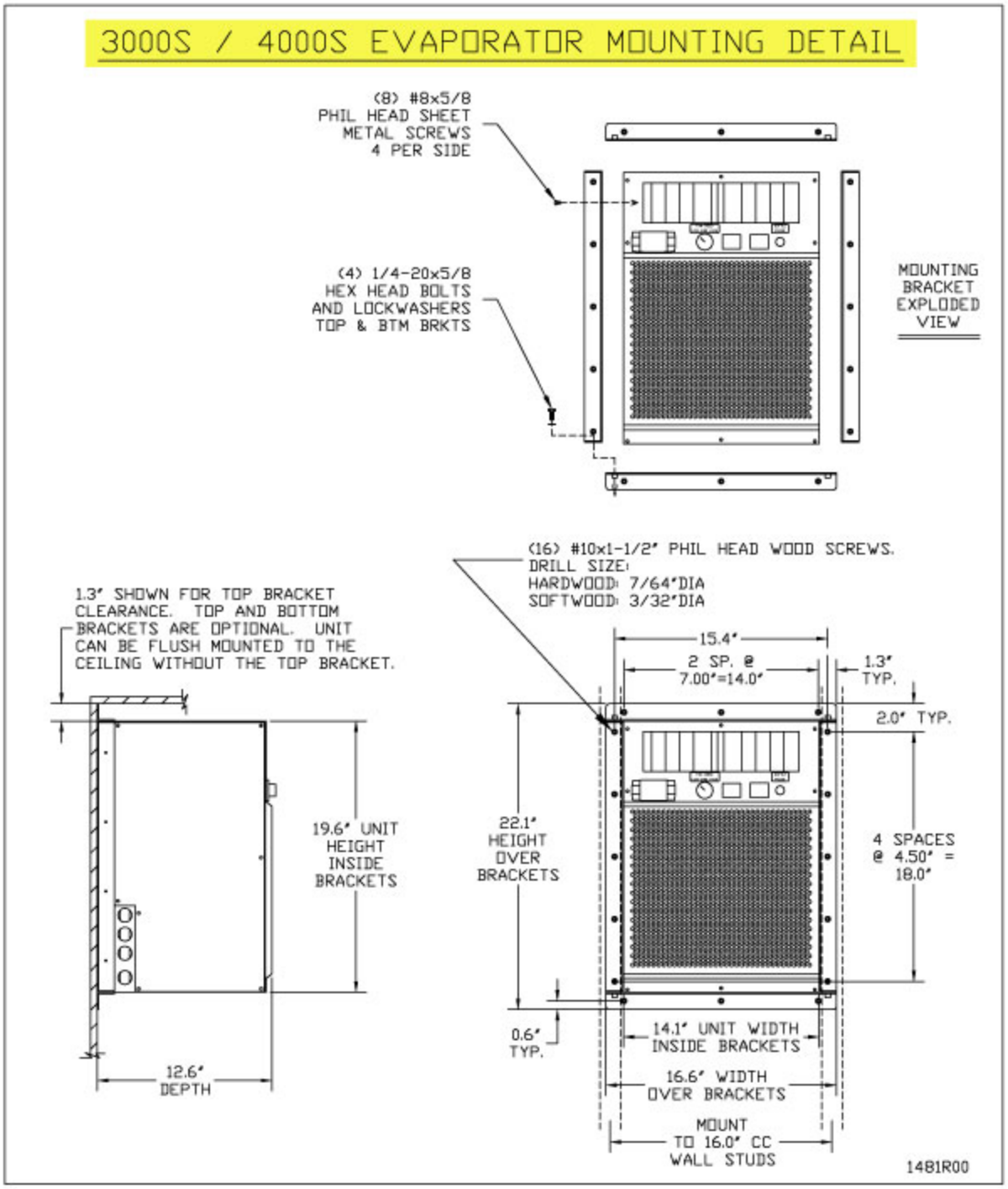

6000S / 8000S

Wall hangers are used to mount these split systems. First, wall brackets are attached to the wall, and then the evaporator slides onto the brackets. After the evaporator is installed, two bottom nuts must be installed on the recessed anchor studs.

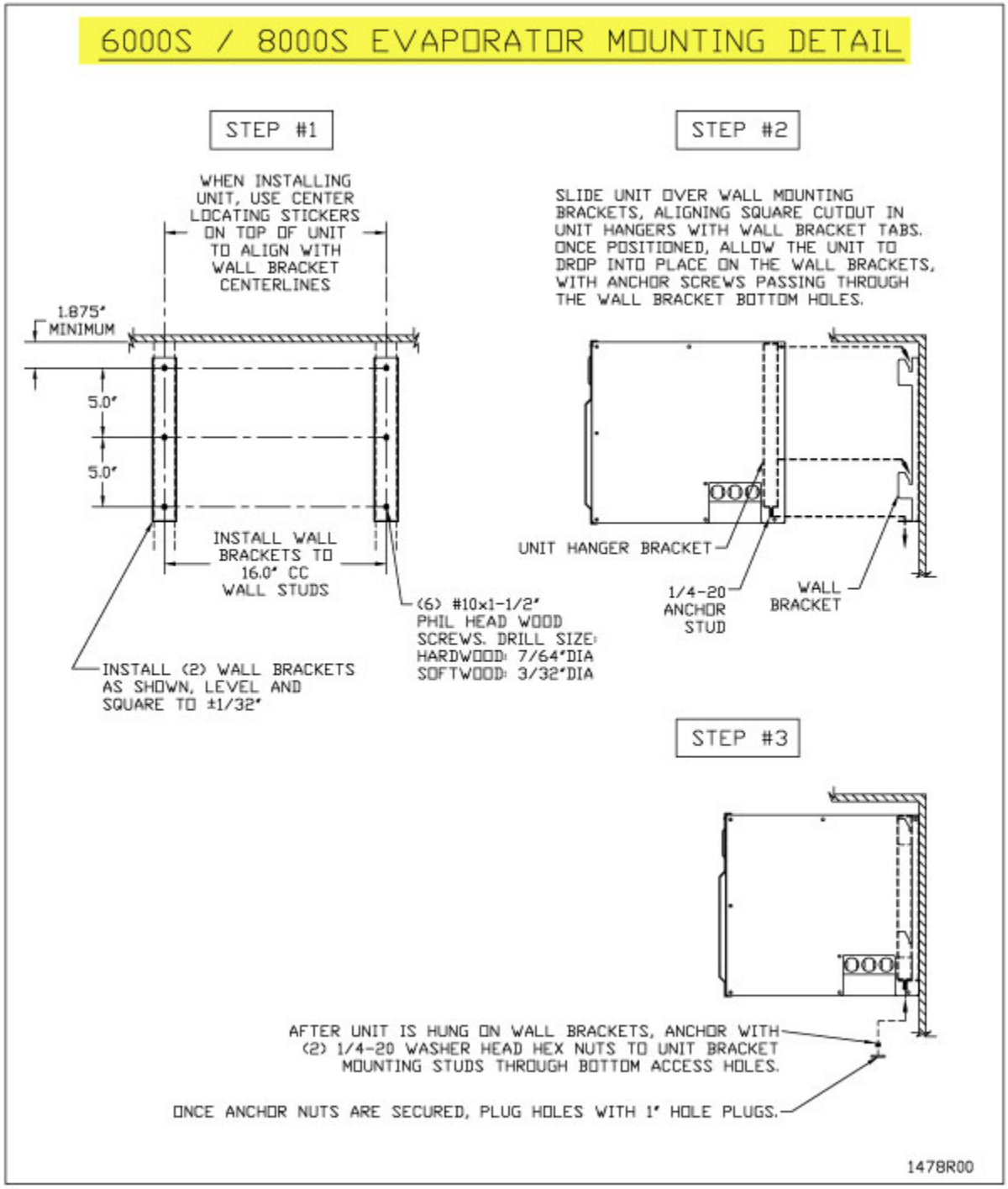

Condensate Drain Line

The condensate drain line should drop, then rise (but stay below the height of the fitting), and then drop again into a drain or bucket. Then, fill the trap with water. The condensate trap will allow any excess moisture inside the Evaporator to overcome the static pressure and flow out of the drain line.

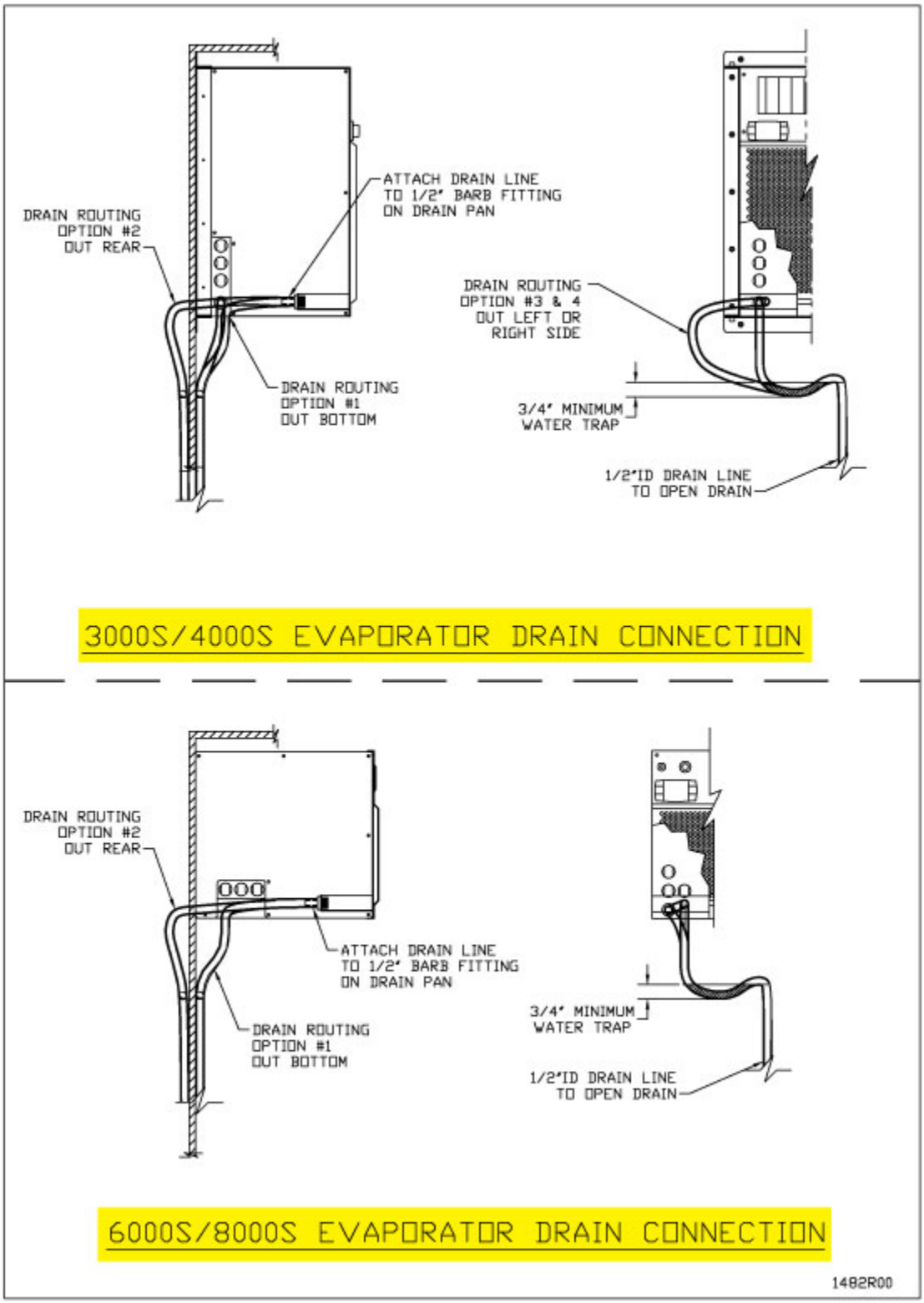

Power Supply Requirements

Option A: Dual Power / Valve Control

	EVAPORATOR							CONDENSING UNIT		
SPLIT SYSTEM MODEL	FAN AMPS @ 115V/60HZ				POWER INPUT WATTS			UNIT AMPS @ 115V/60HZ		POWER INPUT WATTS
	MCA	HIGH	MED	LOW	HIGH	MED	LOW	MCA	LRA	
3000S	1.3	1.0	0.8	0.7	107	84	70	6.4	28.2	442
4000S	1.7	1.4	1.1	1.0	159	122	107	9.2	40.0	591
6000S	2.6	2.1	1.7	1.4	214	168	140	13.5	53.0	922
8000S	3.5	2.8	2.2	1.9	318	244	214	15.4	51.0	1028

NOTES:

1) Separate 115V / 60HZ power supplies are required for the Evaporator and the Condensing Unit.

2) A 15 amp circuit breaker is recommended for all Evaporator models.

3) A 15 amp dedicated circuit breaker (non GFI) is recommended for 3000S and 4000S Condensing Units.

4) A 20 amp dedicated circuit breaker (non GFI) is recommended for the 6000S Condensing Unit.

5) A 25 amp dedicated circuit breaker (non GFI) is recommended for the 8000S Condensing Unit.

Option B: Single Power / Electronic Control

SINGLE 115V 60HZ POWER SUPPLY TO/FROM EVAPORATOR					
SPLIT SYSTEM MODEL	SYSTEM AMPS		POWER INPUT WATTS		
	MCA	LRA	HIGH	MED	LOW
3000S	7.4	28.0	549	526	512
4000S	10.6	40.0	750	713	698
6000S	15.6	53.0	1136	1090	1062
8000S	18.2	51.0	1346	1272	1242

NOTES:

1) A 15 amp dedicated circuit breaker (non GFI) is recommended for 3000S and 4000S systems.

2) A 25 amp dedicated circuit breaker (non GFI) is recommended for 6000S and 8000S systems.

System Wiring – Option A: Dual Power / Valve Control

Under this configuration the Evaporator and Condensing units are separately powered, and the Condensing unit turns on and off based on suction pressure, as follows:

- The Evaporator includes a factory installed liquid line solenoid valve (LLSV), which is controlled by the Evaporator temperature controller. The Condensing unit is controlled by a low pressure switch which reacts to the suction pressure and senses whether the LLSV is open or closed.

- When the Evaporator temperature set-point is reached and the Evaporator turns off, the LLSV closes, causing the system to pump down until the low pressure switch shuts off the Condensing unit.

- When the Evaporator turns on, the LLSV opens, causing the suction pressure to rise and activate the Condensing unit.

Field power wiring is connected to both the Evaporator and Condensing units, no interconnecting wiring is needed between the Evaporator and Condensing unit.

Evaporator Field Power Wiring:

- Connect line lead to Evaporator terminal "L"
- Connect neutral lead to Evaporator terminal "N"
- Connect power ground to grounding lug on Evaporator

Condensing Unit Field Power Wiring:

- Connect line lead to Condensing unit terminal "L1"
- Connect neutral lead to Condensing unit terminal "L2"
- Connect power ground to grounding lug on Condensing unit.

Wiring Diagram – Option A: Dual Power / Valve Control

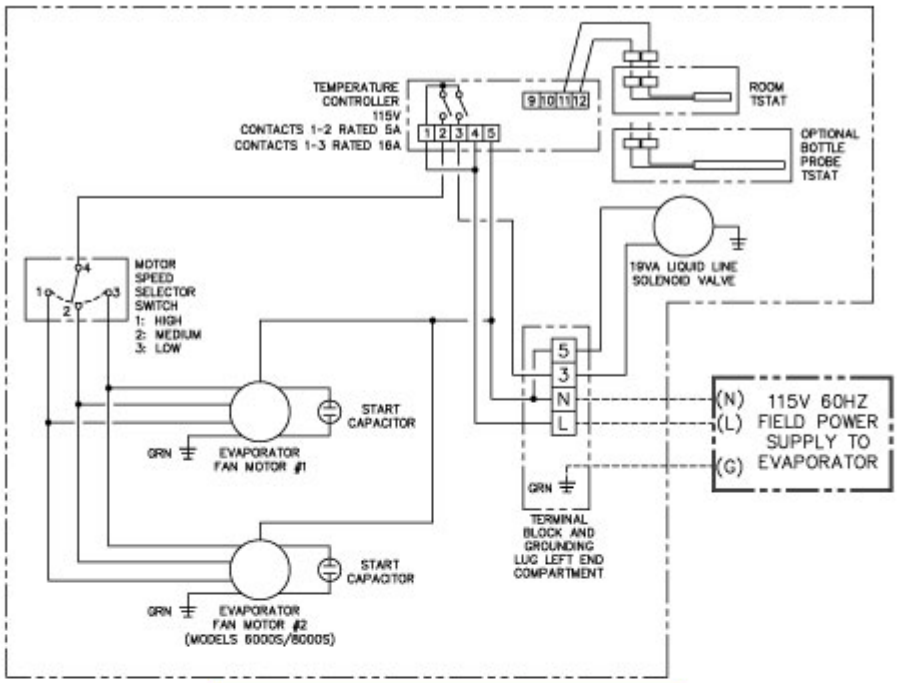

EVAPORATOR UNIT WIRING DIAGRAM

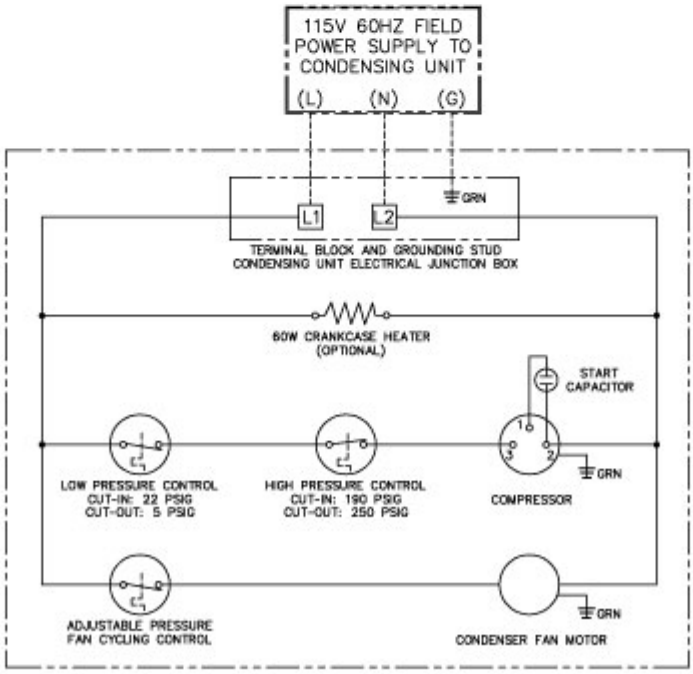

CONDENSING UNIT WIRING DIAGRAM

1475R00

System Wiring – Option B: Single Power / Electronic Control

Under this configuration, only the Evaporator is powered, and the Condensing unit is wired to the Evaporator by connecting:

- "L" on the Evaporator to "L1" on the Condensing unit
- "N" on the Evaporator to "L2" on the Condensing unit
- Ground lug on the Evaporator to the grounding stud on the Condensing unit.
- With optional crankcase heater: Run a separate lead connecting “L” on Evaporator “C” on Condensing Unit.

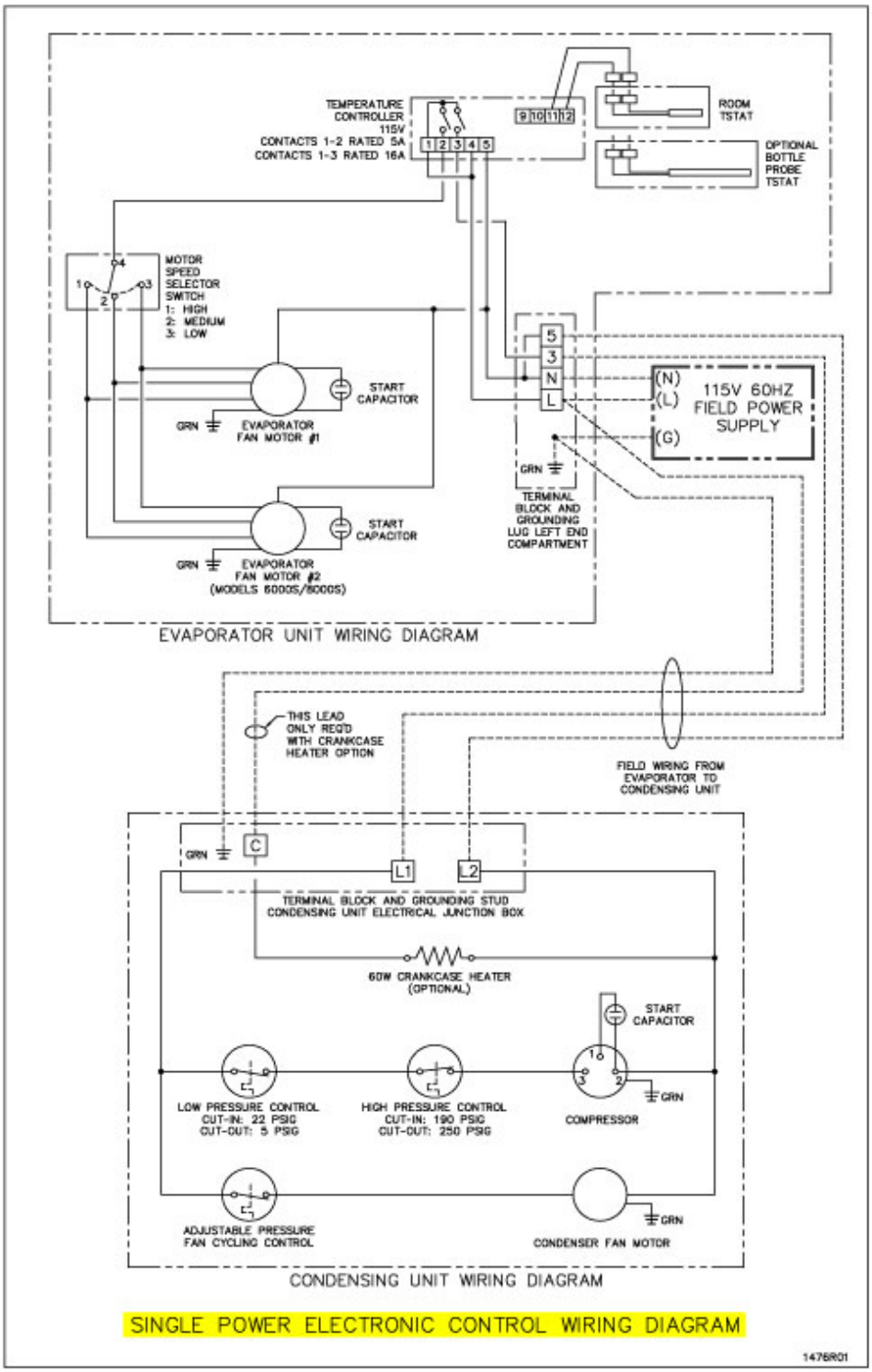

Installing Refrigeration Lines

The Evaporator and Condensing units should be piped according to the following piping schematic:

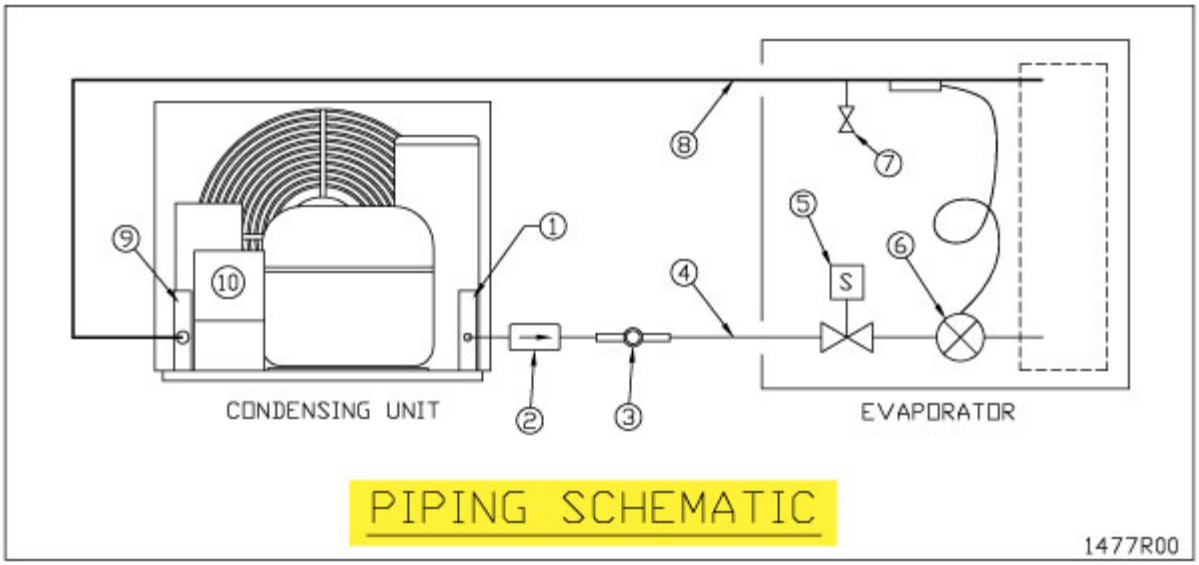

Piping Legend

1. The 3/8"ODS liquid service valve is located on the Condensing unit.
2. Hermetic liquid line filter drier (shipped loose). Install with the directional flow arrow as shown.
3. Liquid line sight glass with moisture indicator (shipped loose).
4. Liquid line refrigeration piping in accordance with Line Sizing Chart.
5. Factory installed liquid line solenoid valve (normally closed) (Dual Power/Valve Control configurations only).
6. Factory installed thermostatic expansion valve. Bulb must be attached to a horizontal run of the suction line after brazing the field suction connection, and insulated with the supplied cork tape.
7. Factory installed suction service valve to use for setting expansion valve superheat.
8. Insulated suction line refrigeration piping in accordance with Line Sizing Chart.
9. 5/8"ODS suction service valve located on Condensing unit.

Line Sizing Chart

Refer to the Line Sizing Chart below for selecting the appropriate tubing size for the length of the piping run. Note that the recommended line size may not match the connection ports on the Condensing unit and the Evaporator. Refrigeration grade fittings must be supplied by the installing technician to make the necessary transitions. **Transitions should be made as close to the unit as possible**. Suction line routing must be designed to ensure oil return to the Condensing unit.

Split System Line Sizing Chart

Model	Liquid Line Size ("ODS) Up to 100 feet	Minimum Suction Line Insulation Thickness (in)	Suction Line Size by Length ("ODS)		
			Up to 25 feet	Over 25 feet up to 50 feet	Over 50 feet up to 100 feet
3000S	1/4	1/2	1/2	1/2	1/2
4000S	3/8	1/2	1/2	1/2	1/2
6000S	3/8	1/2	1/2	5/8	5/8
8000S	3/8	5/8	5/8	5/8	7/8

Notes:

1) Line lengths are expressed in equivalent feet = actual run length + fitting allowances.

2) Chart includes allowances for Condensing Unit Service Valves, Filter Drier, and Sight Glass.

3) Use only dehydrated refrigeration service tubing and refrigeration grade fittings.

4) Install refrigeration piping in accordance with local codes and ASHRAE guidelines.

Evacuation, Leak Detection, and Charging

Once the piping is installed, the following steps should be performed to ensure a dry and leak-free system:

1. The Condensing unit is pre-charged with compressor oil. To avoid moisture contamination of the oil, do not leave the service valves open to atmosphere for more than 15 minutes.

2. Open the liquid and suction service valves on the condensing unit.

3. a. Dual Power Source / Valve Control: Supply power to the Evaporator only - DO NOT connect power to the Condensing unit. Turn on the temperature controller, which will energize and open the liquid line solenoid valve. Verify the solenoid is powered as indicated by the compressor icon ("snowflake") on the temperature controller display.
   b. Not applicable

4. Pressurize the system to a maximum of 150PSIG of dry nitrogen. Mark the pressure and hold for a minimum of 1 hour. If the pressure holds, proceed to the next step, otherwise locate and repair the leak and repeat this step.

5. Evacuate the system to a minimum of 500 microns. If the vacuum is achieved, proceed to the next step, otherwise locate and repair the leak and repeat from step 4.

6. Disconnect the vacuum pump, but **leave the system under vacuum**. Use a charging scale to accurately weigh in the refrigerant. Charge liquid R-134a refrigerant through the liquid service valve according to the charge pounds indicated in the "System R-134a Charge Guidelines" chart below. Additional refrigerant may need to be added, as detailed in the next step.

7. Warm the bottom shell of the compressor above the ambient temperature for 30 minutes to drive excess refrigerant out of the compressor oil. Connect power to the Evaporator and Condensing unit, and activate the system. Check that the sight glass is clear when the compressor is running. The condensing temperature must be above 105°F (135.0 PSIG) when inspecting for a clear sight glass. In a low ambient environment, it may be necessary to block off the condenser air intake to force the condensing temperature higher. If the sight glass is not clear, slowly add <u>vapor</u> refrigerant though the suction service valve.

8. With a clear sight glass, adjust the superheat on the thermostatic expansion valve to 10°F +/- 2°F, as measured at the suction access valve located in the Evaporator.

9. Once the superheat is adjusted, ensure the condenser face airflow is unrestricted and allow the system to balance for 30 minutes.

10. Check the suction superheat at the compressor using the access port on the suction service valve. A minimum superheat of 20°F is required at this location. If it is below 20°F, recheck the thermostatic expansion valve superheat and increase as necessary to ensure a 20°F superheat at the compressor.

11. Adjust the fan cycling control (located on the Condensing unit) so that the condenser fan cuts-out at approximately 90°F (104.5 PSIG), and cuts-in at 120°F (171.0 PSIG).

Installation Tips and Guidelines

- Make sure all electrical connections are secure.
- Inspect Evaporator and Condensing unit fans to confirm airflow. There shouldn't be any excessive vibration, noise or obstructions to airflow.
- Observe system pressures during charging and initial operation and keep note of them as they will be required for the Service and Support Data Sheet which initiates the warranty.
- Continue charging until system has sufficient refrigerant for proper operation. Do not overcharge.
- Remember that bubbles in a sight glass may be caused by a restriction as well as a shortage of refrigerant.
- Do not leave unit unattended until the system has reached normal operating conditions.
- Make sure all access valve caps are in place and tight.
- Make sure liquid and suction service valves are properly back-seated and tighten valve packing if necessary.

System R-134a Charge Guidelines

System R-134a Charge Guidelines				
Actual Line Length	System Charge (lbs) by Model #			
(ft)	3000S	4000S	6000S	8000S
5	1.38	1.65	2.31	3.71
10	1.46	1.85	2.51	3.92
15	1.54	2.05	2.71	4.12
20	1.61	2.25	2.93	4.32
25	1.69	2.45	3.13	4.53
30	1.77	2.65	3.34	4.73
35	1.85	2.85	3.54	4.93
40	1.93	3.05	3.74	5.14
45	2.01	3.25	3.95	5.44
50	2.09	3.45	4.15	5.65
55	2.16	3.65	4.36	5.86
60	2.24	3.85	4.56	6.08
65	2.32	4.05	4.76	6.29
70	2.40	4.25	4.97	6.51
75	2.48	4.45	5.17	6.72
80	2.56	4.65	5.37	6.93
85	2.64	4.85	5.58	7.15
90	2.71	5.05	5.78	7.36

Note:
1) Actual charge may vary - follow charging instructions detailed under Item 6 in the section titled **Evacuation, Leak Detection, and Charging** (above).
2) Lines sized according to Line Sizing Chart assuming act line length plus 10 equivalent feet for fittings losses.

Ducting for the Evaporator

CellarPro Evaporators cold air exhaust and return can be ducted with a hood up to 50 equivalent feet with 8” diameter ducting, or 100 equivalent feet with our auxiliary fan and 8” diameter ducting. We offer a duct kit (sold separately) with two fitting that attach to the front of the cooling unit and can be ducted.

We also offer a remote control panel kit that can be installed remotely (up to 10 feet) from the cooling unit, either inside or outside the cellar, and a bottle probe (10 foot cord) that can be plugged into the cooling unit.

Summary

Keep in mind the following guidelines before purchasing a wine cooling unit from CellarPro:

- If the cellar is too large for the cooling unit, the cooling unit will be unable to maintain proper, even temperatures inside the cellar.
- Without proper insulation and an airtight environment, the cooling unit effectively will become a de-humidifier and potentially will produce buckets of water.
- Without access to cool air, either because of improper ventilation or because the environments is too hot, the cooling unit will be unable to maintain proper temperatures inside the cellar.
- When the cooling unit will be exposed to temperatures below 40°F, a compressor heater must be added to protect the compressor. When the cooling unit is exposed to temperatures below 0°F, the cooling unit will be unable to maintain proper, even temperatures inside the cellar.

Under any of the above conditions, the unit's internal components may become damaged, the expected useful life of the wine cooling unit may be adversely affected, and the product's warranty may become null and void.

IV. Operating Instructions

Overview

CellarPro cooling units are designed to maintain optimal conditions for wine storage and aging. These conditions include steady, cool temperatures, high humidity, minimal vibration and light, and clean air.

The settings on your CellarPro cooling unit have been preset and optimized by the factory. Before changing any settings below, we recommend waiting 14 days to allow the cooling unit to "break in."

The cooling unit is designed to cool the cellar gently without stripping moisture out of the cellar environment. Therefore, it is not uncommon for the cooling unit to run nonstop for up to a week initially, depending on the temperature inside the cellar, the size of the cellar, and the temperature of the ambient environment. Once the cellar has reached equilibrium, it is normal for the cooling unit to run as much as 75 percent of the time.

CellarPro cooling units are designed to maintain optimal temperatures for ***storing and aging*** fine wine. CellarPro cooling units are not designed to maintain temperatures for ***serving*** wine, which tend to be much colder than storage temperatures, especially serving temperatures for white and sparkling wines.

CellarPro cooling units must be used, stored, moved and/or shipped in the upright position. Be careful when turning the unit on its side. The unit NEVER should be turned upside down.

Temperature Control

CellarPro cooling units are designed to turn "on" when the air temperature passing over the evaporator coils inside the cellar exceeds the **Minimum Set Point** plus the **Temperature Differential,** and turn "off" when the temperature drops below the **Minimum Set Point**. For example, if the Minimum Set Point is 58°F and the Temperature Differential is 4°F, the cooling unit will turn on when the temperature rises above 62°F inside the cellar, and it will turn off when the temperature falls below 58°F. In this example, the average temperature inside the cellar will be 60°F.

Basic Operation

The temperature inside the cellar can be increased or decreased by changing the Minimum Set Point as described later in this chapter. If the cooling unit runs too much, you can raise the Minimum Set Point to reduce the cycle "on" time. Most wine collectors store their wine in the range of 55 - 60°F.

CellarPro cooling units are designed to maintain appropriate levels of humidity, ranging from 50 to 70 percent, inside wine cellars. In order to increase or decrease humidity inside the cellar, the **Fon** setting can be changed as described in the "Advanced Operation" section later in this chapter.

Switch Instructions

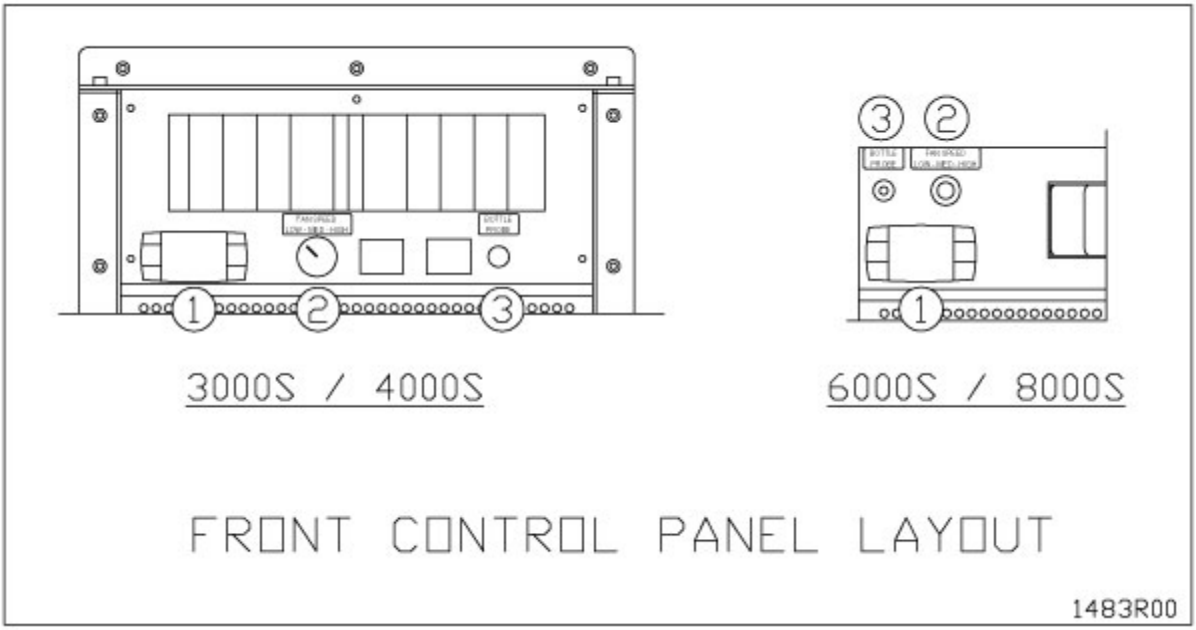

(1) Control Panel: Maintains desired cellar environment. Factory settings are optimized for peak performance. Controller is described in detail in the following section.

(2) Fan Speed Selector Switch (Low/Med/High): The cooling unit fans operate on 3 speed settings: Low, Medium, and High. For optimum sound and energy efficiency, select the lowest fan speed that will maintain the desired cellar temperature. High speed is recommended for initial cellar pull down, exteme temperature conditions and ducted installations.

(3) Bottle Probe Jack (Bottle Probe): Plug in the remote bottle probe (sold separately) to control the cellar by liquid temperature rather than air temperature inside the cellar. Disconnecting the probe will automatically return the control to air temperature. When using a bottle probe, the **Temperature Differential** will need to be adjusted to 2 degrees as shown in the "Advanced Operation" instructions below.

Control Panel Instructions

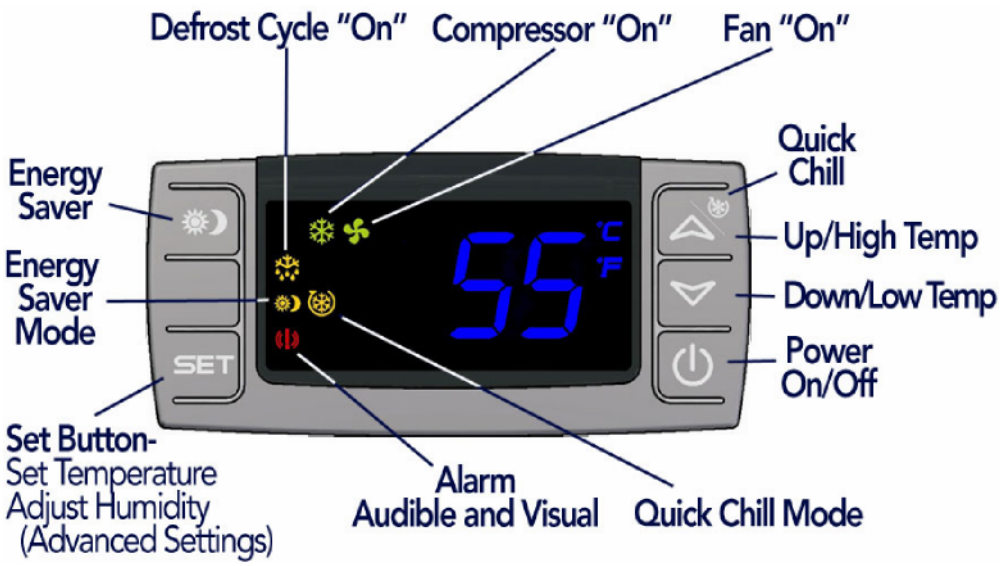

Digital Display

The temperature displayed on the control indicates the real-time air temperature as measured by Probe 1 (P1) located behind the front grill of the cooling unit.

Power "On" / "Off"

Press "Power On/Off" to turn the unit on and off.

When the "Compressor On" indicator light is on, the Compressor is running.

When the "Fan On" indicator light is on, the Fan is running.

Up and Down Buttons

To view the "**High Temp**" recorded by the cooling unit, press the "Up" button once.

To view the "**Low Temp**" recorded by the cooling unit, press the "Down" button once.

To **reset** the "High Temp" or "Low Temp", press the "Set" button for three seconds while "Hi" or "Lo" is displayed. "RST" will blink three times to indicate confirmation.

Set Button

The cooling unit is factory preset with a Minimum Set Point of 58°F and a Temperature Differential of 4°F. This means that the cooling unit will turn on when the display rises above 62°F (58°F + 4°F), and turn off when the display falls below 58°F. In this example, the average temperature inside the cellar will be 60°F.

To view the Minimum Set Point, press the "Set" button for one second.

To change the Minimum Set Point,

- Press the "Set" button for three seconds until °F" blinks
- Press "Up" or "Down" button
- Press "Set" button to confirm

The "Set" temperature will blink three times to indicate confirmation

The recommended Minimum Set Point range is 53 - 60°F. To change the Temperature Differential, see "Advanced Operation" later in this chapter.

Energy Saver Button

To activate and deactivate the “Energy Saver” mode, press the “Energy Saver” button.

The “Energy Saver” indicator light will turn on when the cooling unit is in “Energy Saver” mode.

In “Energy Saver” mode, the Minimum Set Point increases 4°F and the Temperature Differential is unchanged.

Quick Chill Button

To activate the “Quick Chill” mode, press the “Up” / “Quick Chill” button for three seconds.

To deactivate “Quick Chill”, press “Quick Chill” button for three seconds again.

The “Quick Chill” indicator light will turn on when the cooling unit is in “Quick Chill” mode.

In the “Quick Chill” mode, the cooling unit will run continuously for 6 hours (or until the intake temperature registers 50°F). This mode is useful after loading “warm” bottles in a cellar

Advanced Operation

CellarPro cooling systems can be programmed with advanced settings to achieve more control over conditions inside the cellar. Conditions like humidity, the Temperature Differential, and alarm settings all can be modified for custom applications. To access the advanced settings, do the following:

Press the “Set” button and the “Down” button together at the same time, and hold for three seconds. Then, use the “Up” or “Down” button to scroll to the following screen:

HUMIDITY: The factory preset for this setting is “0”.

If the humidity inside the cellar is too low, press the “Set” button, then use the “Up” button until the desired setting is reached. The recommended range for this setting is 0-6.

TEMPERATURE DIFFERENTIAL: The factory preset for this setting is “4”.

This setting determines the Temperature Differential and therefore the temperature at which the cooling unit will cycle on. The recommended range for this setting is 4 or 5.

HIGH TEMPERATURE ALARM: The factory preset for this setting is “70”.

This setting designates the High temperature inside the cellar at which the alarm is triggered. We recommend leaving this setting at the factory preset.

LOW TEMPERATURE ALARM: The factory preset for this setting is “45”.

This setting designates the Low temperature inside the cellar at which the alarm is triggered. We recommend leaving this setting at the factory preset.

ENERGY SAVINGS MODE DIFFERENTIAL: The factory preset for this setting is “4”.

This setting controls the Temperature Differential for the Energy Savings Mode. The recommended range for this setting is 2-4.

V. Troubleshooting

Improper installation, inadequate insulation, or a cellar that is too large will cause the cooling unit to run continuously and be difficult to troubleshoot.

The cooling unit is designed to turn on when the air temperature in the cellar rises ABOVE the Minimum Set Point + Temperature Differential, and turn off when the air temperature falls below the Minimum Set Point. For example, if the Minimum Set Point is 58°F and the Temperature Differential is 4°F, the cooling unit will turn above 62°F and turn off below 58° F. In this example, the average temperature inside the cellar will be 60°F.

Cooling Unit Runs Constantly

When bottles are first loaded in the cellar, the cooling unit will run continuously (even up to a week) until the temperature inside the cellar falls below the Set Point.

Hot weather conditions, insufficient ventilation and/or dirty condenser filters may cause the cooling unit to run continuously. To reduce cycle times,

1. Remove any obstructions to air flow to or from the unit
2. Check to make sure the condenser filter is clean
3. Increase the supply of cool air to the space outside the condenser coils, using a fan, ducting or an exhaust system to remove heat from the space.
4. Raise the Minimum Set Point on the cooling unit

Cooling Unit Is Dripping

The cooling unit is designed to remove excess moisture from inside the cellar, which collects in the drip pan of the cooling unit and is evaporated by the condensate heater. Excess moisture can occur when the cooling unit runs constantly, when the Minimum Set Point is too low and/or when the cellar doesn't have a good seal from the outside environment. To eliminate overflow, do the following:

1. Ensure the condensate overflow drain line is not blocked, that the drain line is trapped and the trap is filled with water.
2. Check that the cellar has airtight seals, including the door(s), light fixtures, and all walls, ceiling and floor.
3. Raise the Minimum Set Point of the cooling unit.

Other Troubleshooting Issues

Issue	Possible Causes	Potential Solutions
No cooling: no refrigerant flow. If the "snowflake" icon is illuminated on the temperature display control, the liquid line solenoid should be energized and the compressor running.	No power to liquid solenoid valve coil	Power supply to Evaporator interrupted. Restore power.
		Power supply to solenoid coil interrupted: loose wire. Inspect for loose fan wiring and reconnect.
	Solenoid coil failure	When the Evaporator is powered on and off, a distinct "click" should be heard indicating the opening/closing of the solenoid valve. If not, the solenoid coil may need to be replaced. Consult factory.
	No power to compressor	Power supply to Condensing Unit interrupted. Restore power.
		Check for loose wires and reconnect.
		Low pressure switch is open: make sure solenoid is energized and condensing unit service valves are open. Jumper out switch to check for a faulty switch, and replace if necessary. Note that in installations below 0°F this switch may remain open. Consult factory.
		High pressure switch is open: make sure condensing unit service valves are open. If this does not correct the problem, refer to the "High Pressure Safety Shutdown" section.
	High pressure safety shutdown / high discharge pressure	Locate and correct source of high condensing head pressure:
		Refrigeration line blockage
		Condenser fan not operating in ambient temperatures above 90°F. Ensure that there is power to the Condensing Unit and verify the fan cycling control settings. Replace condenser fan and fan cycling control if necessary.
	(Cont.) High pressure safety shutdown / high discharge pressure	Insufficient ventilation: reference Condensing Unit installation guidelines for proper placement and ambient temperature requirements. Correct to ensure adequate air ventilation to and from the Condensing Unit. Improper refrigerant charge: inspect for over-charged system or non-condensibles in system.
		Dirty or obstructed condenser coil: clean and remove all obstructions to airflow.
	Intermittent power to compressor	Check for loose wires and secure.
		Compressor cycling on internal thermal overload protection. Replace start capacitor/relay assembl
		Compressor cycling on high pressure - see "High pressure safety shutdown" section.
		Faulty compressor. Consult factory.

Issue	Possible Causes	Potential Solutions
No cooling: Evaporator fan not blowing. If the "fan" icon is illuminated on the temperature display control, the fan should be blowing air.	No power to fan	Power supply to Evaporator interrupted. Restore power.
		Power supply to fan interrupted: loose wire. Inspect for loose fan wiring and reconnect.
	Fan obstructed	With power to unit disconnected, check the rotation of the blower fan. If fan does not spin freely, inspect for and remove obstructions. If no obstructions are found, the fan may need to be replaced. Consult factory.
	Fan running but not drawing air through coil.	Fan short cycling: Make sure all housing panels are attached to the unit. Replace missing panels.
		Coil is blocked with ice. Refer to the "Iced coil" section.
Iced coil	Insufficient number of defrosts	Turn system off and melt ice from coil. Decrease the defrost interval from the default value of 16 hours by changing second level parameter "idF" to a minimum setting of 4 hours. If this corrects the problem, optimize the defrost frequency by setting and observing the system at different set points above “4” and below “16” to ensure the system is configured for maximum run time.
	Low refrigerant charge	System charged incorrectly. Review process and correct.
		Leak in system. Find and repair leak, recharge system.
	Mal-functioning thermostatic expansion valve.	Incorrect superheat setting: determine superheat and adjust. If expansion valve is faulty, replace.
		Expansion valve bulb not located correctly - review installation instructions and correct.
		Liquid flashing at the expansion valve inlet. See "High liquid line pressure drop" section.
	No airflow	See "Evaporator fan not blowing" section
Insufficient liquid sub-cooling	Low refrigerant charge	System charged incorrectly. Review process and correct.
		Leak in system. Find and repair leak, recharge system.
	High liquid line pressure drop	Check for plugged filter drier and replace if necessary.
		Inspect pipe routing for proper piping practices and correct.
		Liquid line picking up too much ambient heat - may need to insulate.

Maintenance

The condenser coils on the Condensing unit will collect dust, dirt and lint over time. If the condenser coils become clogged, the cooling unit will not have proper airflow and its performance and longevity will be compromised. The condenser coils themselves also can be cleaned with a vacuum cleaner – ideally with a brush attachment to loosen dust caught between the fins.

Alarms

The cooling unit has both an audible notification and a visual alarm indicator (shown in "red" on the control panel) that are activated when an alarm is triggered. **Please note**: the temperature alarms (HA and LA) are disabled during the first 23 hours of operation after the cooling unit is plugged in and/or turned on.

The control panel also will flash a code for each alarm, as follows:

Alarm Code	What it means	What to do
P1	Probe 1, which senses the temperature inside the cellar and controls the on/off cycles of the cooling unit, has failed	The cooling unit enters a timed auto-cycle mode until Probe 1 is repaired or replaced. In this mode, the cooling unit will turn on for 12 minutes and off for 8 minutes. Please call CellarPro at 877.726.8496 to repair or replace Probe 1
HA	The temperature inside the cellar is too warm (above 70°F for more than 1 hour)	Check if the cellar has a leak Check if door was left open Lower the ambient temperatures
LA	The temperature inside the cellar is too cold (below 45°F)	Raise the ambient temperature Raise the "Minimum Set Point"

VI. Limited Warranty

For five years from the date of original delivery, your CellarPro warranty covers the internal compressor if it proves to be defective in materials or workmanship. In addition, for two years from the date of original delivery, your CellarPro warranty covers all parts and labor to repair or replace any components in the wine cooling unit that prove to be defective in materials or workmanship. The warranty will not be activated until the Support and Data Service Sheet has been completed and submitted to CellarPro. The warranty period starts from the time of purchase, regardless of the time of activation.

Under the terms of this warranty, CellarPro will repair or replace the original cooling unit with a new or refurbished cooling unit and, once replaced, the original cooling unit must be returned to CellarPro.

All service provided by CellarPro under the above warranty must be performed by a designated repair center, unless otherwise specified by CellarPro. Purchaser is responsible for shipping the cooling unit to and from CellarPro or to and from a designated repair facility, and for removing and reinstalling the cooling unit from the wine cellar.

The limited warranty applies only to cooling units purchased from the factory or an authorized dealer. Damage caused by others or by any cause beyond the control of CellarPro, shall not be considered defects in material or workmanship and are not covered by the warranty. The limited warranty does not cover any parts or labor to correct any defect caused by negligence, commercial use, accident, or improper use, maintenance, installation, service or repair.

THE REMEDIES DESCRIBED ABOVE FOR EACH WARRANTY ARE THE ONLY ONES, WHICH CELLARPRO WILL PROVIDE, EITHER UNDER THESE WARRANTIES OR UNDER ANY WARRANTY ARISING BY OPERATION OF LAW. CELLARPRO WILL NOT BE RESPONSIBLE FOR ANY CONSEQUENTIAL OR INCIDENTAL DAMAGES ARISING FROM THE BREACH OF THESE WARRANTIES OR ANY OTHER WARRANTIES, WHETHER EXPRES, IMPLIED OR STATUTORY.

Some states do not allow the exclusion or limitation of incidental or consequential damages, so the above limitation or exclusion may not apply to you. This warranty gives you specific legal rights and you may also have other legal rights, which vary from state to state.

To receive parts and/or service and the name of a CellarPro designated repair facility nearest you, contact your CellarPro dealer. You may also contact CellarPro directly by calling us at 1.877.726.8496.

VII. Support and Data Service Sheet

To activate the warranty, the cooling unit must be installed properly. In order for us to assess and approve the installation, the installing technician must complete the two pages below and fax to us at 707.794.8005. We will contact you once we receive and review these sheets.

Technician Information

Name	
Contact Number	

System Information

Customer Name	
Condensing Unit Model Number	
Condensing Unit Serial Number	
Evaporator Model Number	
Evaporator Serial Number	

Piping Information

R-134a system charge		Lbs
Liquid line length		Feet
Liquid line diameter		inches OD
Total number of liquid line fittings and bends		
Suction line length		Feet
Suction line diameter		inches OD
Suction line insulation thickness		Inches
Total number of suction line fittings and bends		

Operational Data

Take the following measurements during a normal refrigeration cycle, once the cellar has pulled down to the setpoint temperature. Make sure the compressor is running when recording the data.

Evaporator

Air temperature at Evaporator coil inlet		°F
Air temperature at Evaporator fan outlet		°F
Evaporator fan speed (High / Med / Low)		
Suction pressure at Evaporator access valve		PSIG
Suction temperature at TEV bulb		°F
Evaporator power supply voltage		V
Evaporator power supply amperage		A

Condensing Unit

Air temperature at Condenser coil inlet		°F
Air temperature at Condenser fan outlet		°F
Condenser fan status (ON / OFF)		
Sight glass status (Clear / Bubbles)		
Suction pressure at suction service valve		PSIG
Suction temperature at suction service valve		°F
Liquid pressure at liquid service valve		PSIG
Liquid temperature at liquid service valve		°F
Condensing Unit power supply voltage		V
Condensing Unit power supply amperage		A