WINE CELLARS

Model Nos.: SWC1535B/SWC1102/SWC1875B/SWC1926/SWC1966

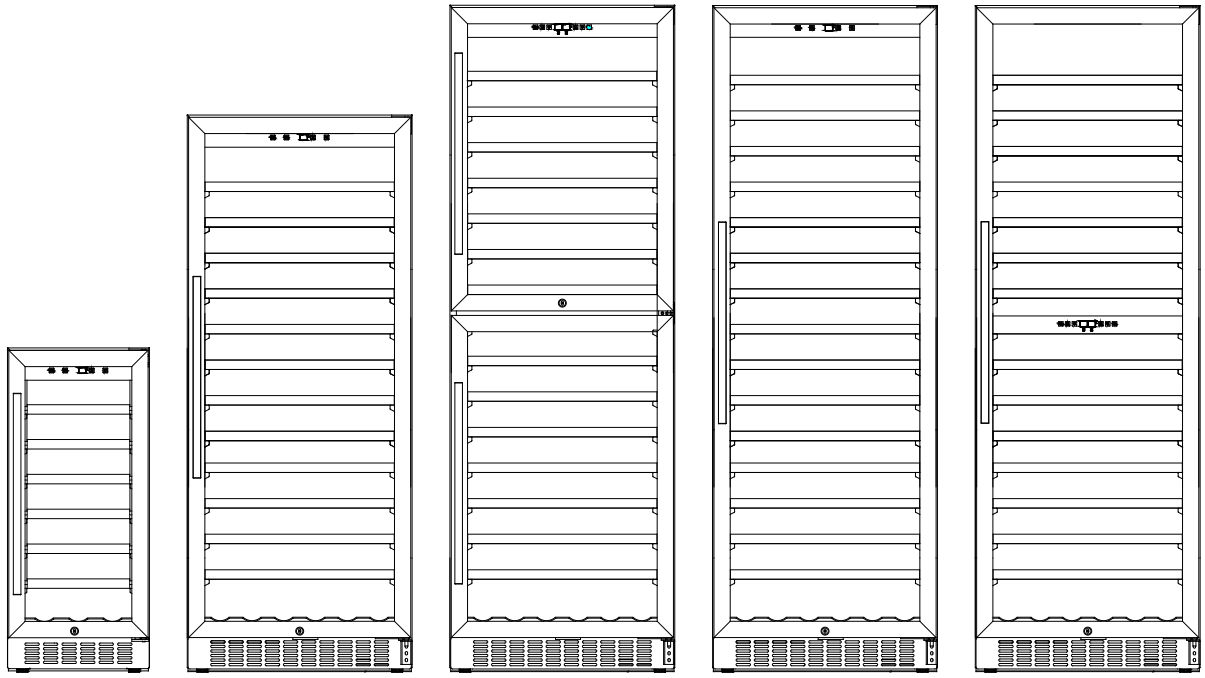

Instruction Manual

BEFORE USE, PLEASE READ AND FOLLOW ALL SAFETY RULES AND OPERATING INSTRUCTIONS.

Write Serial No. (on lower left corner of inside cabinet) here:

_____

Felix Storch, Inc.
770 Garrison Avenue
Bronx, NY10474
www.summitappliance.com

TABLE OF CONTENTS

Appliance Safety	**3**
Important Safeguards	**3-4**
Location of Parts	**5-7**
Installation Instructions	**7-12**
Before Using Your Appliance	7
Installation of Your Appliance	7-8
Built-in Cabinet Instructions	8
Electrical Connection	8
Extension Cord	9
Reversing the Door Swing of Your Appliance	9-11
Installing the Stainless Steel Handle	12
Operating Your Appliance	**12-16**
Recommended Temperature Settings	12
Control Panel for SWC1535B/SWC1102/SWC1926	12-13
Control Panel for SWC1875B/SWC1966	13-14
Interior Light	14
Sabbath Mode	14-15
Temperature Memory Function	15
Temperature Alarm / Door Alarm	15
Door Lock	15
Wine Shelves	15
Defrosting	15-16
Storage	16
Care and Maintenance	**17**
Cleaning Your Wine Cellar	17
Power Failure	17
Vacation Time	17
Moving Your Appliance	17
Energy Saving Tips	17
Troubleshooting	**18-19**
Limited Warranty	**20**

APPLIANCE SAFETY

Your safety and the safety of others are very important.

We have provided many important safety messages in this manual and on your appliance. Always read and obey all safety messages.

This is the Safety Alert Symbol. The symbol alerts you to potential hazards that can kill or injure you and others. All safety messages will follow the Safety Alert Symbol and either the words DANGER or WARNING.

DANGER

DANGER means that failure to heed this safety statement may result in severe personal injury or death.

WARNING

WARNING means that failure to heed this safety statement may result in extensive product damage, serious personal injury, or death.

All safety messages will alert you about the potential hazard, tell you how to reduce the chance of injury, and let you know what can happen if the instructions are not followed.

IMPORTANT SAFEGUARDS

Before the appliance is used, it must be properly positioned and installed as described in this manual, so read the manual carefully. To reduce the risk of fire, electrical shock or injury when using the appliance, follow basic precautions, including the following:

DANGER

- Plug into a grounded 3-prong outlet, do not remove grounding prong, do not use an adapter, and do not use an extension cord.
- Replace all panels before operating.
- It is recommended that a separate circuit serving only your appliance be provided. Use receptacles that cannot be turned off by a switch or pull chain.
- Never clean appliance parts with flammable fluids. These fumes can create a fire hazard or explosion. And do not store or use gasoline or other flammable vapors and liquids in the vicinity of this or any other appliance. The fumes can create a fire hazard or explosion.
- Do not connect or disconnect the electric plug when your hands are wet.
- Unplug the appliance or disconnect power before cleaning or servicing. Failure to do so can result in electrical shock or death.
- Do not attempt to repair or replace any part of your appliance unless it is specifically recommended in this manual. All other servicing should be referred to a qualified technician.
- This appliance is CFC- and HFC-free and contains small quantities of Isobutane (R600a)which is environmentally friendly, but flammable. It does not damage the ozone layer,nor does it increase the greenhouse effect.Care must be taken during transportation and setting up of the appliance that no parts of the cooling system are damaged. Leaking coolant can ignite and may damage the eyes.
  In the event of any damage:

- Avoid open flames and anything that creates a spark,
- Disconnect from the electrical power line,
- Air the room in which the appliance is located for several minutes, and
- Contact the Service Department for advice.

- The more coolant there is in an appliance, the larger the room it should be installed in. In the event of a leakage, if the appliance is in a small room, there is the danger of combustible gases building up. For every ounce of coolant at least 325 cubic feet of room space is required. The amount of coolant in the appliance is stated on the data plate inside the appliance. It is hazardous for anyone other than an Authorized Service Person to carry out servicing or repairs to this appliance.
- Take serious care when handling, moving, and using the appliance to avoid either damaging the refrigerant tubing or increasing the risk of a leak.
- Replacing component parts and servicing shall be done by factory-authorized service personnel so as to minimize the risk of possible ignition due to incorrect parts or improper service.

⚠ WARNING

FOLLOW WARNING CALLOUTS BELOW ONLY WHEN APPLICABLE TO YOUR MODEL

- Use two or more people to move and install appliance. Failure to do so can result in back or other injury.
- To ensure proper ventilation for your appliance, the front of the unit must be completely unobstructed. Choose a well-ventilated area with temperatures above 60°F (16°C) and below 90°F (32°C). [The unit performs best when the ambient temperature is in the range 72 – 78°F [23º – 26ºC).] This unit must be installed in an area protected from the elements, such as wind, rain, water spray or drips.
- The appliance should not be located next to ovens, grills or other sources of high heat.
- The appliance must be installed with all electrical, water and drain connections in accordance with state and local codes. A standard electrical supply (115 V AC only, 60 Hz), properly grounded in accordance with the National Electrical Code and local codes and ordinances, is required.
- Do not kink or pinch the power supply cord of the appliance.
- The size of the fuse (or circuit breaker) should be 15 amperes.
- It is important that the appliance be leveled in order to work properly. You may need to make several adjustments to level it.
- All installations must be in accordance with local plumbing code requirements.
- Make certain that the pipes are not pinched, kinked or damaged during installation.
- Check for leaks after connection.
- Never allow children to operate, play with or crawl inside the appliance.
- Although the unit has been tested at the factory, due to long-term transit and storage, the first batch of cubes must be discarded.
- Do not use solvent-based cleaning agents or abrasives on the interior. These cleaners may damage or discolor the interior.
- Use this appliance only for its intended purpose as described in this *Instruction Manual*.
- Keep fingers out of the “pinch point” areas. Clearances between the doors and between the doors and cabinet are necessarily small. Be careful closing doors when children are in the area.

⚠ DANGER ⚠ ***Risk of child entrapment!***

Child entrapment and suffocation are not problems of the past. Junked or abandoned appliances are still dangerous, even if they will “just sit for a few days”.

Before discarding your old refrigerator:

- *Take off the doors*
- *Leave the shelves in place so that children may not easily climb inside.*

- SAVE THESE INSTRUCTIONS -

LOCATION OF PARTS

MODEL SWC1535B

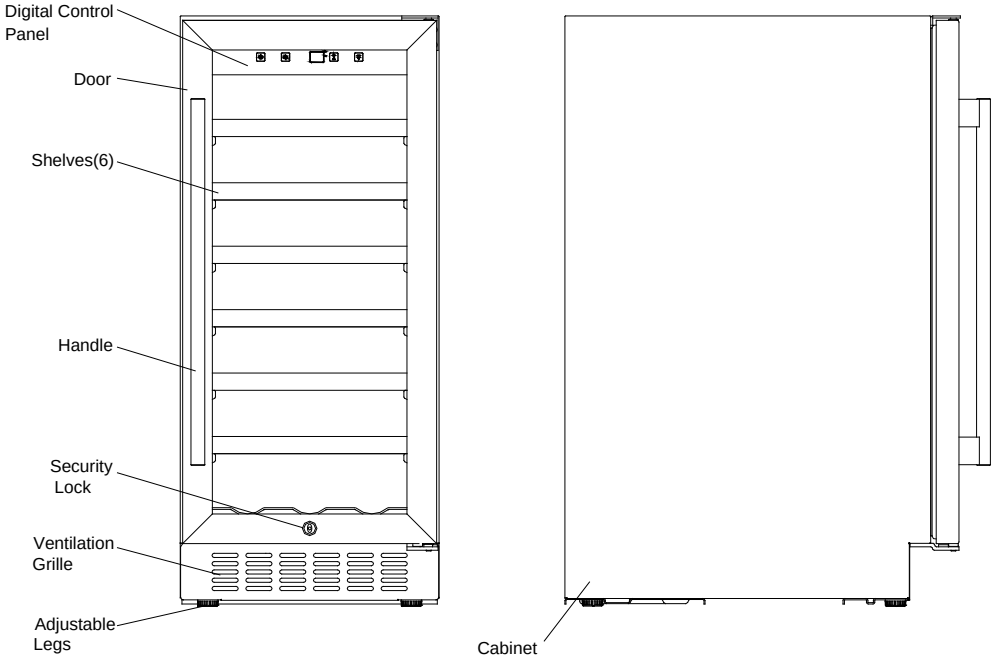

MODEL SWC1875B

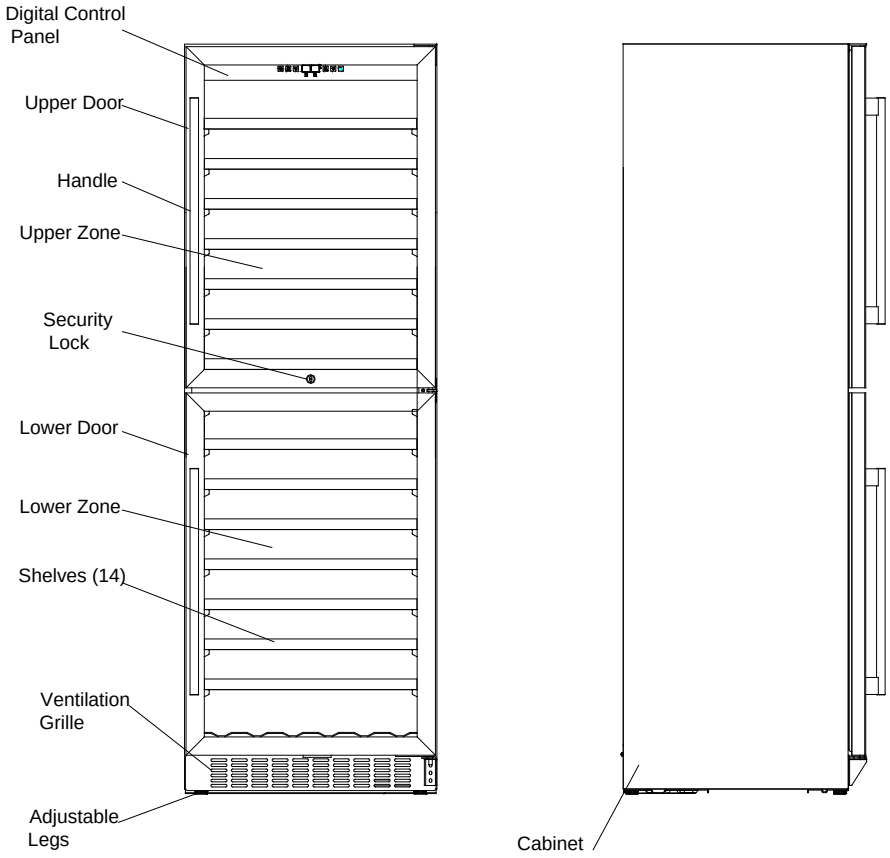

MODEL SWC1102

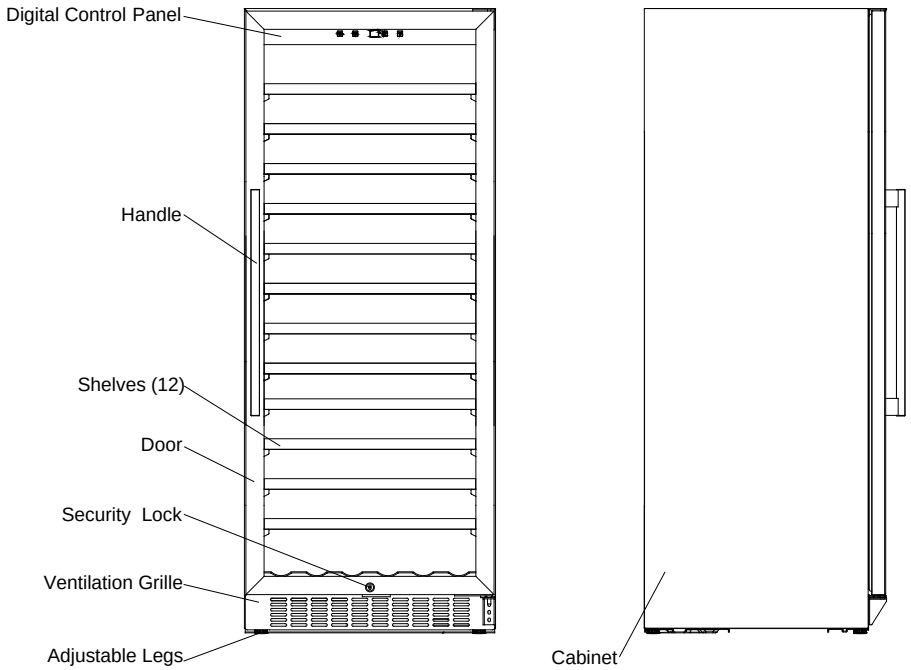

MODEL SWC1926

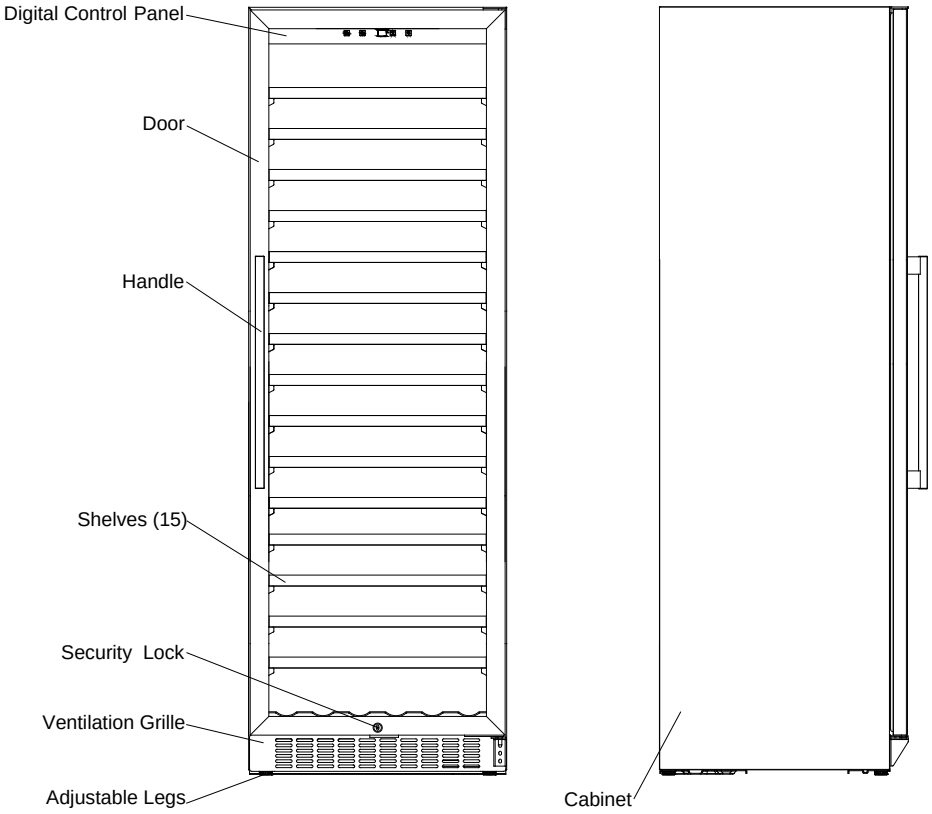

MODEL SWC1966

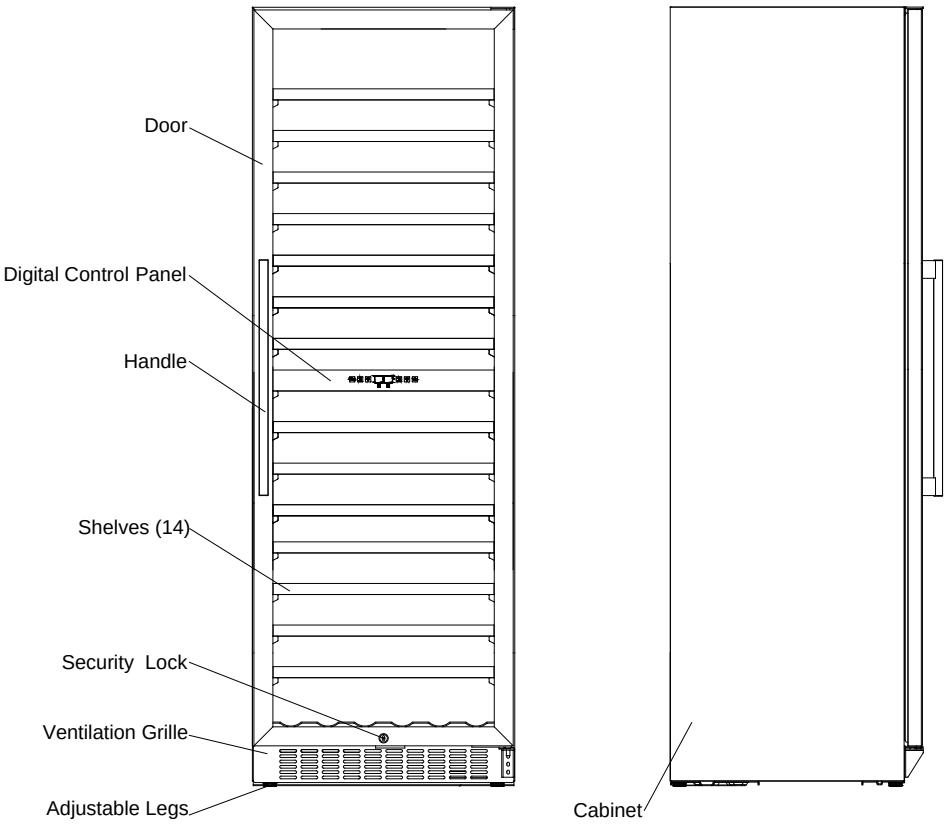

INSTALLATION INSTRUCTIONS

BEFORE USING YOUR APPLIANCE

- Remove the exterior and interior packing.
- Before connecting the appliance to the power source, let it stand upright for approximately 2 hours. This will reduce the possibility of a malfunction in the cooling system from handling during transportation.
- Clean the interior surface with lukewarm water using a soft cloth.
- Install the handle on the door. *(See page 12.)*

INSTALLATION OF YOUR APPLIANCE

- The appliance is designed for built-in, recessed or free-standing installation.
- **WARNING**: Do not store or install the appliance outdoors.
- **CAUTION:** This appliance is designed for storing and cooling wines. Do not store perishable food, medicine or other medical products.
- Place your Wine Cellar on a floor that is strong enough to support it when it is fully loaded. To level the unit, adjust the front adjustable legs.
- For freestanding installation, 5” (127mm) of space at the back and sides of the unit and 4“ (102mm) at the top are suggested, which allows the proper air circulation to cool the compressor and condenser

for energy saving. Even for built-in installation, it is a must to keep at least 3/16” (5mm) of space on each side, 2” (50mm) at the back and 1/16” (1.6mm) at the top to ensure proper service access and ventilation. And the air vent at the front of the appliance must never be covered or blocked in any way.

- NOTE: It is recommended that you do not install the appliance near an oven, radiator or other heating source. Direct sunlight may affect the acrylic coating and heat sources may increase electrical consumption. Do not install in a location where the temperature will fall below 60°F (16°C). For best performance, do not install the appliance behind a cabinet door or block the base grille.
- Avoid locating the unit in moist areas.
- Plug the Wine Cellar into an exclusive, properly grounded wall outlet. Do not under any circumstances cut or remove the third (ground) prong from the power cord. Any questions concerning power and/or grounding should be directed toward a certified electrician or an authorized service center.

BUILT-IN CABINET INSTRUCTIONS

This unit is designed for either built-in or free-standing installation. If you plan to use the unit in a built-in application,use the following dimensions for the enclosure:

Model	SWC1535B	SWC1102	SWC1875B	SWC1926/SWC1966
Width	15¾” / 40 cm	23.8” / 60.5 cm	23.8” / 60.5 cm	23.8” / 60.5 cm
Depth	24¾” / 63 cm	24¾” / 63 cm	24¾” / 63 cm	28½" / 72.5 cm
Height	34¼” / 87 cm	58¼” / 148 cm	69⅞” / 177.5 cm	69⅞” / 177.5 cm

ELECTRICAL CONNECTION

WARNING

Improper use of the grounded plug can result in the risk of electrical shock. If the power cord is damaged, have it replaced by a qualified electrician or an authorized service center.

This appliance should be properly grounded for your safety. The power cord of this appliance is equipped with a three-prong plug which mates with standard three-prong wall outlets to minimize the possibility of electrical shock.

Do not under any circumstances cut or remove the third (ground) prong from the power cord supplied. For personal safety, this appliance must be properly grounded.

This appliance requires a standard 115/120 Volt AC 60Hz three-prong grounded electrical outlet. Have the wall outlet and circuit checked by a qualified electrician to make sure the outlet is properly grounded. When a standard 2-prong wall outlet is encountered, it is your responsibility and obligation to have it replaced with a properly grounded 3-prong wall outlet.

To prevent accidental injury, the cord should be secured behind the appliance and not left exposed or dangling.

The appliance should always be plugged into its own individual electrical outlet which has a voltage rating that matches the rating label on the appliance. This provides the best performance and also prevents overloading house wiring circuits that could cause a fire hazard from overheating. Never unplug the appliance by pulling on the power cord. Always grip the plug firmly and pull straight out from the receptacle. Repair or replace immediately all power cords that have become frayed or otherwise damaged. Do not use a cord that shows cracks or abrasion damage along its length or at either end. When moving the appliance, be careful not to damage the power cord.

EXTENSION CORD

Because of potential safety hazards under certain conditions, it is strongly recommended that you do not use an extension cord with this appliance. However, if you must use an extension cord it is absolutely necessary that it be a UL/CUL-Listed, 3-wire grounding type appliance extension cord having a grounding type plug and outlet and that the electrical rating of the cord be 115 volts and at least 10 amperes.

REVERSING THE DOOR SWING OF YOUR APPLIANCE

This unit has the capability of the door opening from either the left or right side. The unit is delivered to you with the door opening from the left side. Should you desire to reverse the opening direction, please follow the reversal instructions shown below.

NOTE: All parts removed must be saved to allow the door swing to be reversed.

- **Model SWC1535B**

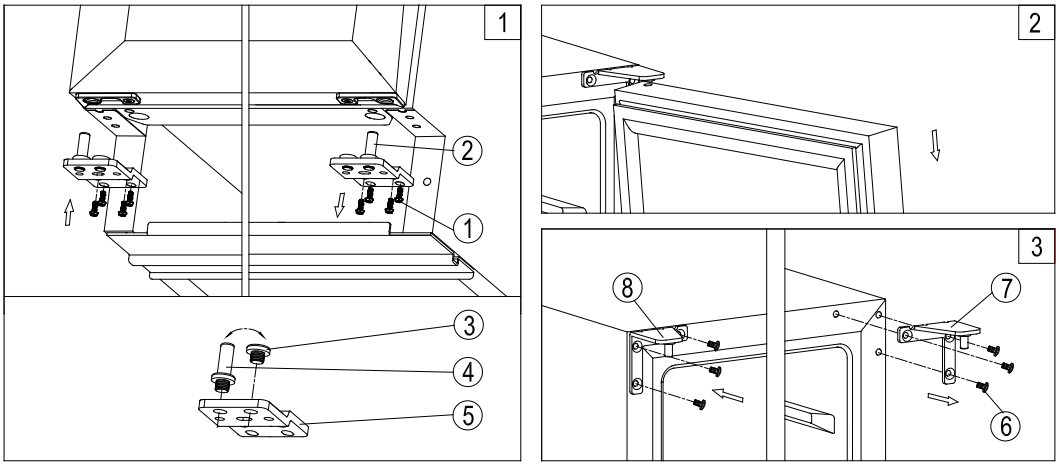

1. Remove the bottom hinge **2** by unscrewing the four lock screws **1**. Be careful to hold the door firmly after removing the screws. (Fig. 1)

2. Gently pull down to remove the door from the right top hinge and place it on a padded surface to avoid the risk of damage. Then remove the right top hinge **7**. (Figs. 2 & 3)

3. Unscrew and transfer pins **4** and **3** of the hinge plate to the opposite side. (Fig. 1)

4. Pop out the cover caps on the left side of cabinet and use them to cover the screw holes on the right hand side.

5. Screw the alternative left top hinge **8**, included in the fittings, on the left hand side of cabinet. (Fig. 3)

6. Relocate the door to the designated position. Then screw the bottom hinge assembly on the left designated position and tighten it after the door is leveled. (Fig. 1)

7. Remove the handle from the left side of the door and install it on the right side. (*See page 12*.)

- **Model SWC1875B**

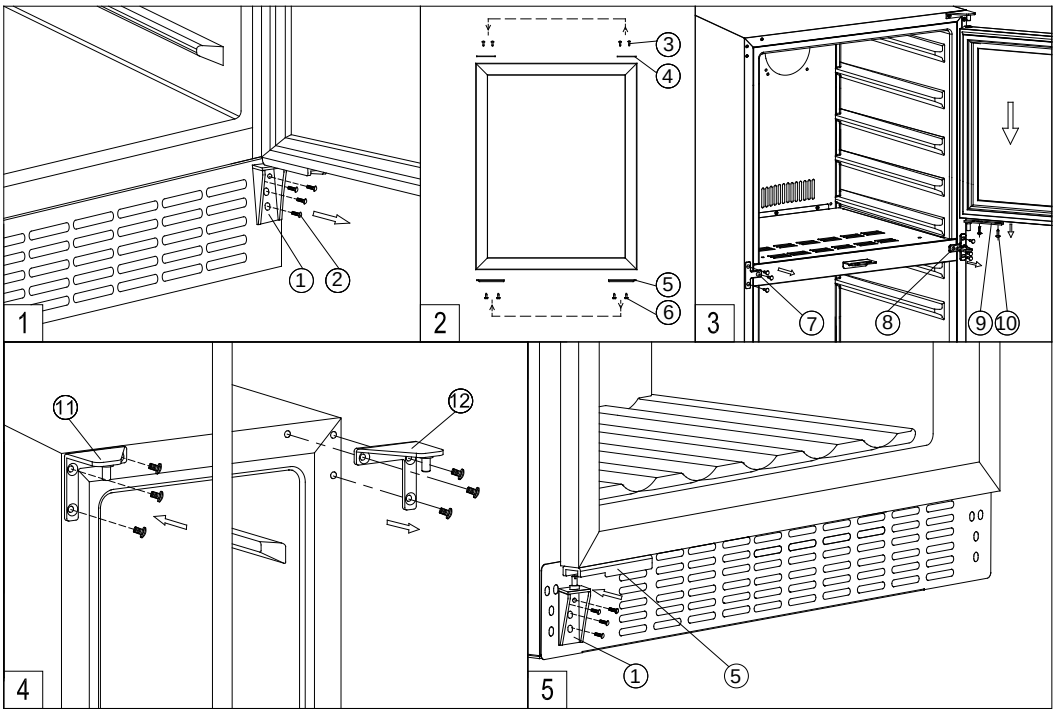

1. Remove the bottom hinge **1** by unscrewing the four lock screws **2**. Be careful to hold the lower glass door firmly after removing the screws. Then gently pull down to remove the lower glass door from the middle hinge **8** and place it on a padded surface to avoid the risk of damage. (Fig. 1)

2. Unscrew and transfer the lower door adapters **4** & **5** to the left designated positions of glass door. (Fig. 2)

3. Remove the upper door adapter **9** by unscrewing the two lock screws **10**.Be careful to hold the upper glass door firmly after removing the screws. And then gently pull down to remove the upper glass door from the top hinge and place it on a padded surface to avoid the risk of damage. (Fig. 3)

4. Unscrew and remove the middle hinge **8** and the right top hinge **12**. (Figs. 2 & 3)

5. Pop out the cover caps on the left side of cabinet and use them to cover the screw holes on the right hand side. At the same time unscrew and transfer the middle decoration cover **7** to the right designated position of cabinet.

6. Screw the middle hinge **8** and the alternative left top hinge **11** included in the fittings on the left hand side of cabinet. (Fig.4)

7. Relocate the upper door adapter **9** and set the upper glass door to the designated position and install the two lock screws **10** to connect the upper door adapter **9** with the upper glass door and tighten them before the upper door is leveled.

8. Relocate the lower glass door and install the bottom hinge **1** to the designated position. Recheck and adjust the lower door alignment by loosening the screws **3 & 6**and moving the door adapters **4 & 5**. Tighten the four screws **3 & 6** after the door is levelled. (Fig. 5)

9. Remove the handles from the left side of the doors and install them on the right side. (*See page 12*.)

- **Model SWC1102/SWC1926/SWC1966**

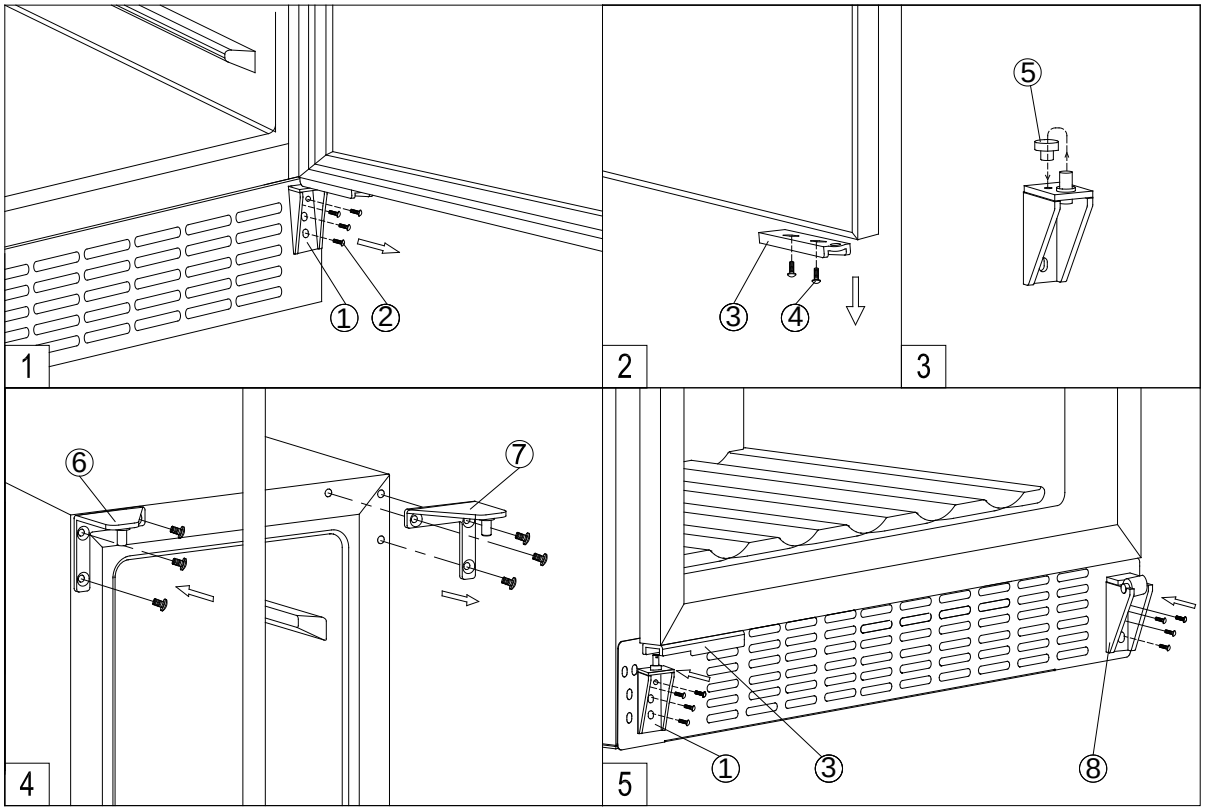

1. Remove the bottom hinge **1** by unscrewing the four lock screws **2**. Be careful to hold the glass door firmly after removing the screws. (Fig. 1)

2. Gently pull down to remove the glass door from the right top hinge and place it on a padded surface to avoid the risk of damage. Then remove the right top hinge **7**. (Fig. 4)

3. Pop out the cover caps on the left side of the cabinet and use them to cover the screw holes on the right hand side.

4. Screw the alternative left top hinge **6**, included in the fittings, on the left hand side of cabinet. (Fig. 4)

5. Unscrew and transfer door supporter **8** to the opposite side. (Fig. 5) At the same time remove the stopper pin **5** of bottom hinge to the opposite designated position. (Fig. 3)

6. Unscrew and transfer the door adapter **3** to the left designated position of the glass door. (Fig. 2)

7. Relocate the glass door to the designated position. Then screw the bottom hinge on the left designated position and tighten it. (Fig. 5)

8. Recheck and adjust the door alignment by loosening the two screws **4** and moving the door adapter **3**. Tighten the two screws **4** after the door is levelled. (Fig. 5)

9. Remove the handle from the left side of the door and install it on the right side. (*See page 12*.)

INSTALLING THE STAINLESS STEEL HANDLE

This appliance includes a stainless steel handle that is not required to operate the unit. To install the handle, follow the instructions below:

Locate the handle **1** over the pins **3** of the door and tighten the handle by screwing in screws **2** with an Allen wrench.

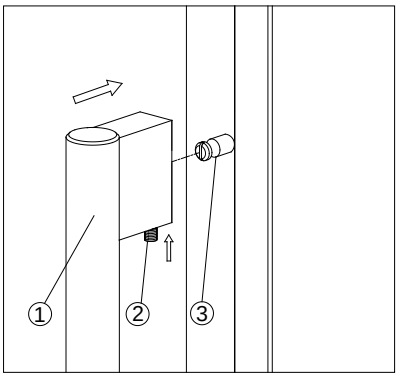

OPERATING YOUR APPLIANCE

It is recommended you install the appliance in a place where the ambient temperature is between 60 and 90°F (16 – 32°C), although optimum performance occurs when the temperature range is 72 and 78ºF (23 – 26ºC). If the ambient temperature is above or below the recommended temperatures, the performance of the unit may be affected. For example, placing your unit in extremely cold or hot conditions may cause interior temperatures to fluctuate. The range of 41º-72ºF (5º-22ºC) may not be reached.

RECOMMENDED TEMPERATURE SETTINGS

Conservation	49 ~ 57ºF	10 ~ 14ºC
Red Wines	58 ~ 72ºF	15 ~ 22ºC
Dry/White Wines	48 ~ 57ºF	9 ~ 14ºC
Rosé Wines	49 ~ 51ºF	10 ~ 11ºC
Sparkling Wines	41 ~ 47ºF	5 ~ 8ºC

CONTROL PANEL for SWC1535B / SWC1102 / SWC1926

ON/OFF Power

To turn the appliance ON or OFF, touch the ⏻ symbol and hold for 5 seconds.
NOTE: Pressing the POWER key once can switch off the audible alarm when the alarm is on.

LIGHT

Turn the interior light on and off with this switch.

UP

Used to increase (warm) the set temperature by 1°C/1ºF.

DOWN

Used to decrease (cool) the set temperature by 1°C/1ºF.

Indicator Light

The indicator light is located at the right lower corner of the display. The indicator light will be on when a multi-key function is selected. To perform a multi-key function, press and hold the first key, then press the second key for at least 5 seconds and then release both keys.

ºF/ºC Selector

Select the temperature display setting in Fahrenheit or Celsius degree. To change the temperature from Fahrenheit to Celsius or from Celsius to Fahrenheit, press and hold the **LIGHT** key for 5 seconds.

Setting the Temperature Control

- You can set the temperature by touching the **UP** and **DOWN** symbols. When you push the two buttons at the same time, the LED readout will show the original temperature set previously. (The temperature preset at the factory is 54°F or 12°C.)
- The temperature you are setting will increase by one degree each time you touch the **Up** symbol, and will decrease by one degree each time you touch the **DOWN** symbol.
- The range of the temperature control is from 41°F to 72°F.
- To view the set temperature at any time, touch the **UP** or **DOWN** symbol. The set temperature will flash in the display window for 5 seconds. After 5 seconds, the temperature inside the unit will reappear in the display window.

CONTROL PANEL for SWC1875B / SWC1966

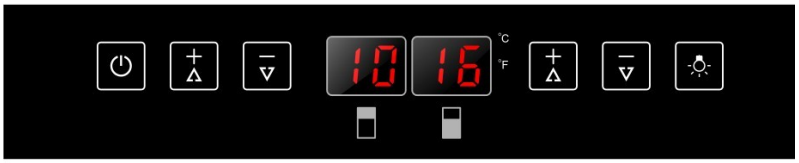

ON/OFF Power

To turn the appliance ON or OFF, touch the ⏻ symbol and hold for 5 seconds.
NOTE: Pressing the POWER key once can switch off the audible alarm when the alarm is on.

LIGHT

Turn the interior light on and off with this switch.

UP

Used to increase (warm) the set temperature by 1°C/1ºF.

DOWN

Used to decrease (cool) the set temperature by 1°C/1ºF.

Indicator Light

The indicator light is located at the right lower corner of the display. The indicator light will be on when a multi-key function is selected. To perform a multi-key function, press and hold the first key, then press the second key for at least 5 seconds and then release both keys.

ºF/ºCSelector

Select the temperature display setting in Fahrenheit or Celsius degree. To change the temperature

from Fahrenheit to Celsius or from Celsius to Fahrenheit, press and hold the **LIGHT** key for 5 seconds.

Setting the Temperature Control

- The unit has two separate temperature zones. The temperature of both zones can be set between 41ºF and 72ºF (5ºC and 22ºC). The **LOWER** temperature zone is ideal for storing red and white wines at a setting of 55°F to 72°F (13°C to 22°C). The **UPPER** temperature zone is suitable for storing champagne and white wines at a setting of 41°F to 55°F (5°C to 13°C).
- When the unit is plugged in for the first time, the unit will power up automatically to the preset defaults.The preset temperature at the factory for the **UPPER** temperature zone is 50ºF (10ºC) and for the **LOWER** temperature zone is 60ºF (16ºC).
- You can press the left side **UP** and **DOWN** keys to control the internal temperature of the **UPPER** temperature zone and press the right side **UP** and **DOWN** keys to control the internal temperature of the **LOWER** temperature zone. When you press the two keys at the same time, the display will show the last temperature set previously.
- **NOTE:The temperature set for the LOWER temperature zone must always be just as high as or higher than that in the UPPER temperature zone. For optimal performance, the set temperature of the two zones should differ by at least 8F°.**
- The temperature that you desire to set will increase 1ºC or 1ºF if you press the **UP** key once; on the contrary the temperature will decrease 1ºC or 1ºF if you press the **DOWN** key once. The display flashes while you make the setting.
- After the temperature has been set, the display shows the current inner temperature of the particular temperature zone.
- To view the set temperature at any time, press the **UP** or **DOWN** key; the set temperature will temporarily flash in the display for 5 seconds.Then the display shows the current inner temperature again.

NOTE:

- If the unit is unplugged, or power is lost or turned off, you must wait 3 to 5 minutes before restarting the unit. If you attempt to restart before this time delay, the unit will not start.
- When you use the unit for the first time or restart the unit after it has been shut off for a long time, there could be a few degrees variance between the temperature you select and the one indicated on the LED readout. This is normal and is due to the length of the activation time. There should not be a problem once the unit has been running for a few hours.

INTERIOR LIGHT

The interior light makes it easy to view your wine labels and enhances the display of your collection. The **LIGHT** switch allows you to toggle between 2 modes of operation for the internal lights: functional (default) mode and showcase mode. If you are in functional (default) mode (also named as energy saving mode), the lights will turn on only when the door is open. If you are in showcase mode, the lights will be on whether or not the door is open.

SABBATH MODE

Sabbath mode is available for the observance of certain religious holidays. This mode turns off the displays, interior light and audible alarms and prevents them from turning on again. Normal cooling operations will still take place.

To initiate Sabbath mode, press the **POWER** and **LIGHT** keys at the same time for at least 5 seconds. The indicator light will flash four times and confirm the Sabbath mode is ON.

Sabbath mode can be exited by repeating the above process. The Sabbath Mode will automatically turn off after 96 hours.

TEMPERATURE MEMORY FUNCTION

In the event of a power interruption (power surge, breaker switch, etc.), the unit will remember the previous temperature settings, and when the power is recovered, the cabinet temperature will return to the same setting as before the power went off.

TEMPERATURE ALARM / DOOR ALARM

- The audible alarm sounds if the storage temperature is not cold enough.The temperature display flashes at the same time.

- The cause of the temperature being too high may be:
  - Warm fresh items were placed inside
  - Too much warm ambient air flowed in when rearranging and removing food
  - Power failure for some time
  - The appliance is faulty

- The audible alarm is automatically silenced and the temperature display stops flashing when the temperature is sufficiently cold again.

- If the door has been left open for more than 60 seconds, the alarm will sound. Pressing the POWER key once will switch off the audible alarm.

DOOR LOCK

Your unit is provided with a lock and key combination.

The keys are located inside the plastic bag that contains the *Instruction Manual*. Insert the key into the lock and turn it counter-clockwise to unlock the door. To lock the door, do the reverse operation, making sure the metal pin is engaged completely. Remove the key and place it in a secure place for safekeeping.

WINE SHELVES

To prevent damaging the door gasket, make sure to have the door all the way open when pulling the shelves out of the rail compartment.

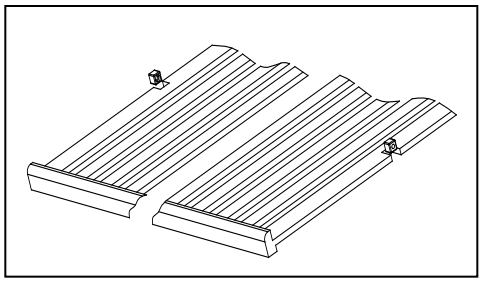

- For easy access to the stored bottles, you can pull the shelf approximately halfway out of the rail compartment. However this unit was designed with a plastic post on each side of the shelf track to prevent bottles from falling.
- When removing the wooden shelf from the inner rails, make sure to remove all bottles first. Then move the shelf to the position where the notches in the wooden shelf are exactly aligned with the plastic posts and lift the wooden shelf. In order to replace the shelf, repeat this procedure in reverse.

DEFROSTING

- The unit defrosts automatically in normal operating conditions.

- The evaporator behind the rear wall of the unit defrosts automatically. The condensate collects in the

drainage channel behind the rear wall of the unit, and flows through the drainage hole into the drip tray by the compressor where it evaporates.

- However, frost may accumulate on the evaporator if the unit is repeatedly opened in a high heat or high humidity location. If this frost pattern does not clear within 24 hours, your unit will require manual defrosting.

STORAGE

Bottles can differ in size. Accordingly, the actual number of bottles you can store may vary.

The approximate maximum bottle capacity can be achieved when storing traditional 750 ml Bordeaux bottles in bulk storage.

You may load your wine bottles in single rows or by stacking while taking note of the following: if you do not have enough bottles to fill your wine cellar, it is better to distribute the load throughout the wine cellar so as to avoid “all on top” or “all below” type loads.

- Do remove or relocate adjustable wooden shelves to accommodate larger types of bottles or increase the capacity of the cellar by stacking the bottles when necessary. (See instructions for removing shelves, above.)
- Keep small gaps between the walls and the bottles to allow air to circulate. As in an underground cellar, air circulation is important to prevent mold and for a more homogeneous temperature within the cellar.
- To facilitate air circulation, do not overload your wine cellar.
- Avoid obstructing the internal fans (located inside on the rear panel of the wine cellar).
- To prevent bottles from falling, do not try to slide the shelves outward beyond the fixed position.
- Do not pull out more than one loaded shelf at a time as this may cause the wine cellar to tilt forward if not properly installed.

CARE AND MAINTENANCE

CLEANING YOUR WINE CELLAR

- Turn off the power, unplug the appliance, and remove all items, including shelves.
- Wash the inside surfaces with a solution of warm water and baking soda (about 2 tablespoons of baking soda to a quart of water).
- Wash the shelves with a mild detergent solution.
- Wring excess water out of the sponge or cloth when cleaning the area where the controls are located, or any electrical parts.
- Wash the outside cabinet with warm water and mild liquid detergent. Rinse well and wipe dry with a clean soft cloth.
- Do not use steel wool or a steel brush on the stainless steel.

CAUTION:
Failure to unplug the appliance during cleaning could result in electrical shock or other personal injury.

POWER FAILURE

Most power failures are corrected within a few hours and should not affect the temperature of your appliance if you minimize the number of times the door is opened. If the power is going to be off for a longer period of time, you need to take the proper steps to protect the contents.

VACATION TIME

- **Short vacations:** Leave the appliance operating during vacations of less than three weeks.
- **Long vacations:** If the appliance will not be used for several months, remove all items and turn off the appliance. Clean and dry the interior thoroughly. To prevent odor and mold growth, leave the door open slightly, blocking it open if necessary.

MOVING YOUR APPLIANCE

1. Remove all items.
2. Securely tape down all loose items (shelves) inside your appliance.
3. Turn the adjustable legs up to the base to avoid damage.
4. Tape the door(s) shut.
5. Be sure the appliance stays secure in the upright position during transportation. Also, protect the outside of the appliance with a blanket or similar item.

ENERGY SAVING TIPS

- The appliance should be located in the coolest area of the room, away from heat-producing appliances and out of direct sunlight.
- Ensure that the unit is adequately ventilated. Never cover air vents.
- Do not keep the door open any longer than necessary.

TROUBLESHOOTING

You can solve many common problems easily, saving you the cost of a possible service call. Try the suggestions below to see if you can solve the problem before calling the servicer.

Troubleshooting Guide

PROBLEM	POSSIBLE CAUSE	REMEDY
Appliance does not operate.	• Appliance is not connected to a power supply. • The appliance is turned off. • Tripped circuit breaker or a blown fuse.	• Connect the appliance. • Switch on the appliance. • Switch on the circuit breaker or replace the fuse.
Appliance is not cold enough.	• The temperature is not set correctly. • The ambient temperature could require a lower temperature setting. • The door was opened too often. • The door was not closed completely. • Door is not hermetically sealed. • The condenser is too dirty. • The ventilation opening is blocked or too dusty.	• Check the set temperature. • Set a lower temperature. • Do not open the door more often than necessary. • Close door properly. • Check the door seal and clean or replace. • Clean the condenser when necessary. • Clear the obstructions and clean the dust.
Appliance turns itself on and off frequently.	• The room temperature is higher than average. • A large number of bottles has been added to the unit. • The door is open too often. • The door is not closed completely. • The door gasket does not seal properly.	• Put the appliance in a cooler place. • Leave the appliance to work for a while until the set temperature has been reached. • Do not open the door more often than necessary. • Close door properly. • Check the door seal and clean or replace.
The light does not work.	• Appliance is not connected to a power supply. • Tripped circuit breaker or a blown fuse. • The light was switched off on the control panel.	• Connect the appliance. • Switch on the circuit breaker or replace the fuse. • Switch on the light.
Vibrations	• The appliance is not properly level.	• Level the appliance with the adjustable feet.
The appliance seems to make too much noise.	The rattling noise may come from the flow of the refrigerant, which is normal. As each cycle ends, you may hear gurgling sounds caused by the flow of refrigerant in your appliance. If temperature fluctuations occur, the contraction and expansion of the inner walls may cause popping and crackling noises.	
	• The appliance is not properly level.	• Level the appliance with the adjustable feet.

The door will not close properly.	• The appliance is not properly level. • The door was reversed and not properly installed. • The gasket is dirty. • The shelves are out of position.	• Level the appliance with the adjustable feet. • Check the door hinge and reassemble correctly. • Clean the door gasket. • Check the shelves and refit correctly.
Display “E0”, “E1”. “E2”, “E3”, “E4”, “E5” or “E7”.	• “E0” indicates a communication error for 3-zone models. • “E1” or “E2” indicates that the air temperature sensor has failed. • “E3” or “E4”indicates that the defrost sensor in the evaporator has failed. • “E5” indicates defrost heater failure. • “E7” indicates door switch failure.	• Call for service.
The alarm sounds and the temperature display flashes.	Has the appliance door been open for longer than 60 seconds? If not, then the temperature has risen higher or fallen lower than the temperature that has been set. This could be due to: • The appliance door being opened too often. • The ventilation opening being covered or too dusty. • A lengthy interruption to the power supply. • A large number of bottles has been added to the unit.	If yes, close the door. • Do not open the door more often than necessary. • Clear the obstructions and remove the dust. • Leave the appliance to work for a while until the set temperature has been reached.
The icon “--” is lit up and flashing in the temperature display.	• The display temperature is out of range.	• Only temperatures within the range 0~99°F/-9~37°C can be displayed. If the temperature is not within this range, the icon “--” will be displayed instead. This is normal.

LIMITED WARRANTY

ONE-YEAR LIMITED WARRANTY

Within the 48 contiguous United States, for one year from the date of purchase, when this appliance is operated and maintained according to instructions attached to or furnished with the product, warrantor will pay for factory-specified parts and repair labor to correct defects in materials or workmanship. Service must be provided by a designated service company. Outside the 48 states, all parts are warranted for one year from manufacturing defects. Plastic parts, shelves and cabinets are warranted to be manufactured to commercially acceptable standards, and are not covered from damage during handling or breakage.

5-YEAR COMPRESSOR WARRANTY

1. The compressor is covered for 5 years.
2. Replacement does not include labor.

ITEMS WARRANTOR WILL NOT PAY FOR:

1. Service calls to correct the installation of your appliance, to instruct you how to use your appliance, to replace or repair fuses or to correct wiring or plumbing.
2. Service calls to repair or replace appliance light bulbs or broken shelves. Consumable parts (such as filters) are excluded from warranty coverage.
3. Damage resulting from accident, alteration, misuse, abuse, fire, flood, acts of God, improper installation, installation not in accordance with electrical or plumbing codes, or use of products not approved by warrantor.
4. Replacement parts or repair labor costs for units operated outside the United States.
5. Repairs to parts or systems resulting from unauthorized modifications made to the appliance.
6. Expenses for travel and transportation for product service in remote locations.
7. The removal and reinstallation of your appliance if it is installed in an inaccessible location or is not installed in accordance with published installation instructions.

DISCLAIMER OF IMPLIED WARRANTIES; LIMITATION OF REMEDIES

CUSTOMER'S SOLE AND EXCLUSIVE REMEDY UNDER THIS LIMITED WARRANTY SHALL BE PRODUCT REPAIR AS PROVIDED HEREIN. IMPLIED WARRANTIES, INCLUDING WARRANTIES OF MERCHANTABILITY OR FITNESS FOR A PARTICULAR PURPOSE, ARE LIMITED TO ONE YEAR. WARRANTOR SHALL NOT BE LIABLE FOR INCIDENTAL OR CONSEQUENTIAL DAMAGES. SOME STATES DO NOT ALLOW THE EXCLUSION OR LIMITATION OF INCIDENTAL OR CONSEQUENTIAL DAMAGES, OR LIMITATIONS ON THE DURATION OF IMPLIED WARRANTIES OF MERCHANTABILITY OR FITNESS, SO THESE EXCLUSIONS OR LIMITATIONS MAY NOT APPLY TO YOU. THIS WARRANTY GIVES YOU SPECIFIC LEGAL RIGHTS AND YOU MAY ALSO HAVE OTHER RIGHTS, WHICH VARY FROM STATE TO STATE.

FELIX STORCH, INC.
770 Garrison Avenue
Bronx, NY10474
Phone: (718) 893-3900
Fax: (718) 842-3093
www.summitappliance.com

SUMMIT PROFESSIONAL

For parts and accessory ordering, troubleshooting and helpful hints, visit:
www.summitappliance.com/support

Printed in China